

COMBINATIONAL LOGIC

Combinational Circuits

Mano Chapter 4

Chapter 4 Combinational Logic

- Logic circuits for digital systems may be combinational or sequential.
- A combinational circuit consists of input variables, logic gates, and output variables.

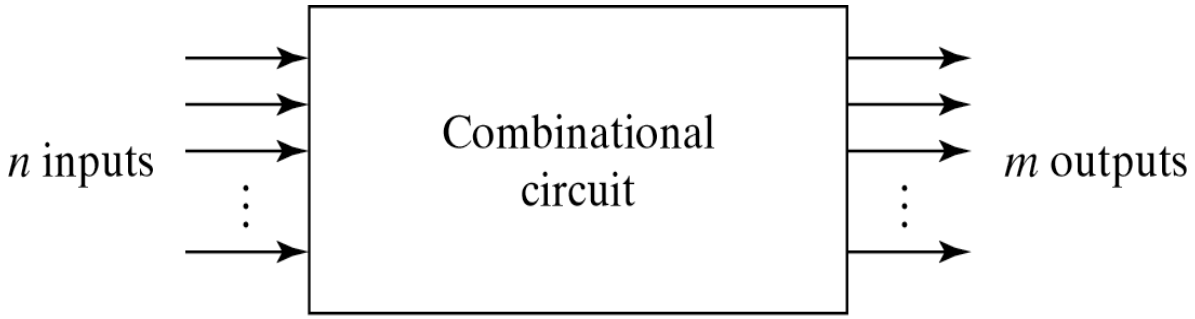

Fig. 4-1 Block Diagram of Combinational Circuit

4-2. Analysis procedure

- To obtain the output Boolean functions from a logic diagram, proceed as follows:

1. Label all gate outputs that are a function of input variables with arbitrary symbols. Determine the Boolean functions for each gate output.

2. Label the gates that are a function of input variables and previously labeled gates with other arbitrary symbols. Find the Boolean functions for these gates.

4-2. Analysis procedure

3. Repeat the process outlined in step 2 until the outputs of the circuit are obtained.

4. By repeated substitution of previously defined functions, obtain the output Boolean functions in terms of input variables.

Example

$F_2 = AB + AC + BC$; $T_1 = A + B + C$; $T_2 = ABC$; $T_3 = F_2'T_1$;

$F_1 = T_3 + T_2$

$F_1 = T_3 + T_2 = F_2'T_1 + ABC = A'BC' + A'B'C + AB'C' + ABC$

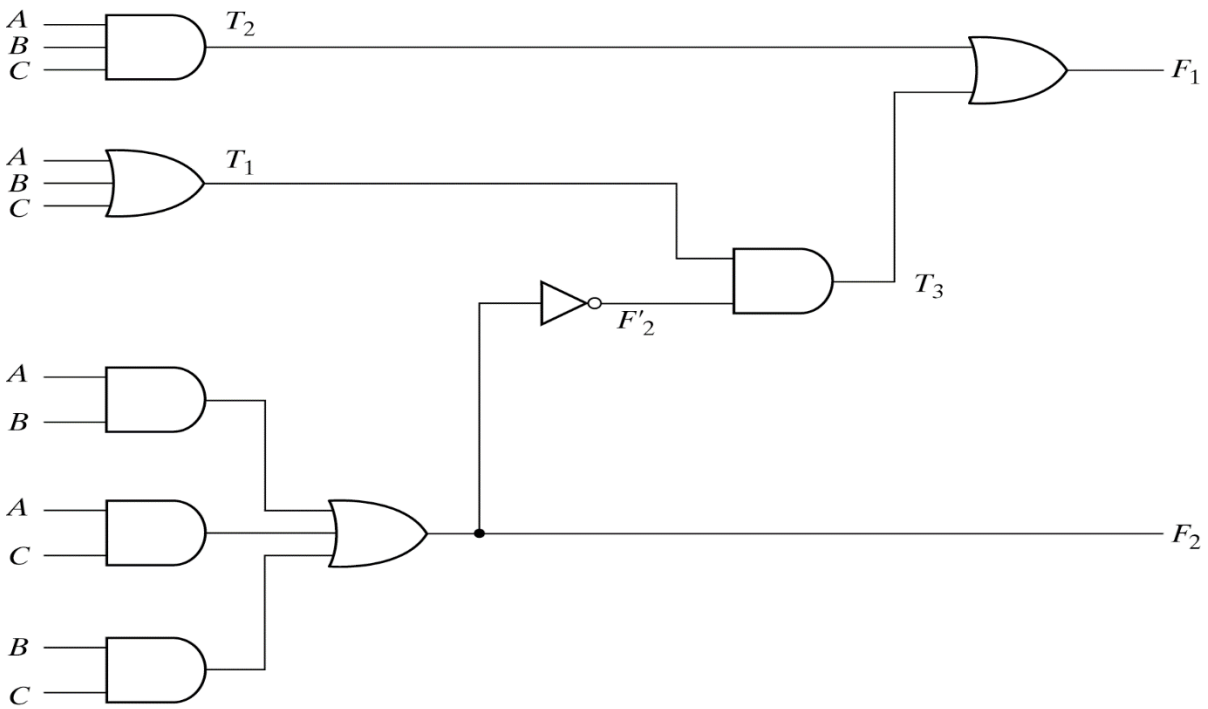

Fig. 4-2 Logic Diagram for Analysis Example

Derive truth table from logic diagram

- We can derive the truth table in Table 4-1 by using the circuit of Fig.4-2.

Table 4-1
Truth Table for the Logic Diagram of Fig. 4-2

A	B	C	F_2	F_2'	T_1	T_2	T_3	F_1
0	0	0	0	1	0	0	0	0
0	0	1	0	1	1	0	1	1
0	1	0	0	1	1	0	1	1
0	1	1	1	0	1	0	0	0
1	0	0	0	1	1	0	1	1
1	0	1	1	0	1	0	0	0
1	1	0	1	0	1	0	0	0
1	1	1	1	0	1	1	0	1

4-3. Design procedure

1. Table4-2 is a Code-Conversion example, first, we can list the relation of the BCD and Excess-3 codes in the truth table.

Table 4-2
Truth Table for Code-Conversion Example

Input BCD				Output Excess-3 Code			
A	B	C	D	w	x	y	z
0	0	0	0	0	0	1	1
0	0	0	1	0	1	0	0
0	0	1	0	0	1	0	1
0	0	1	1	0	1	1	0
0	1	0	0	0	1	1	1
0	1	0	1	1	0	0	0
0	1	1	0	1	0	0	1
0	1	1	1	1	0	1	0
1	0	0	0	1	0	1	1
1	0	0	1	1	1	0	0

Karnaugh map

2. For each symbol of the Excess-3 code, we use 1's to draw the map for simplifying Boolean function.

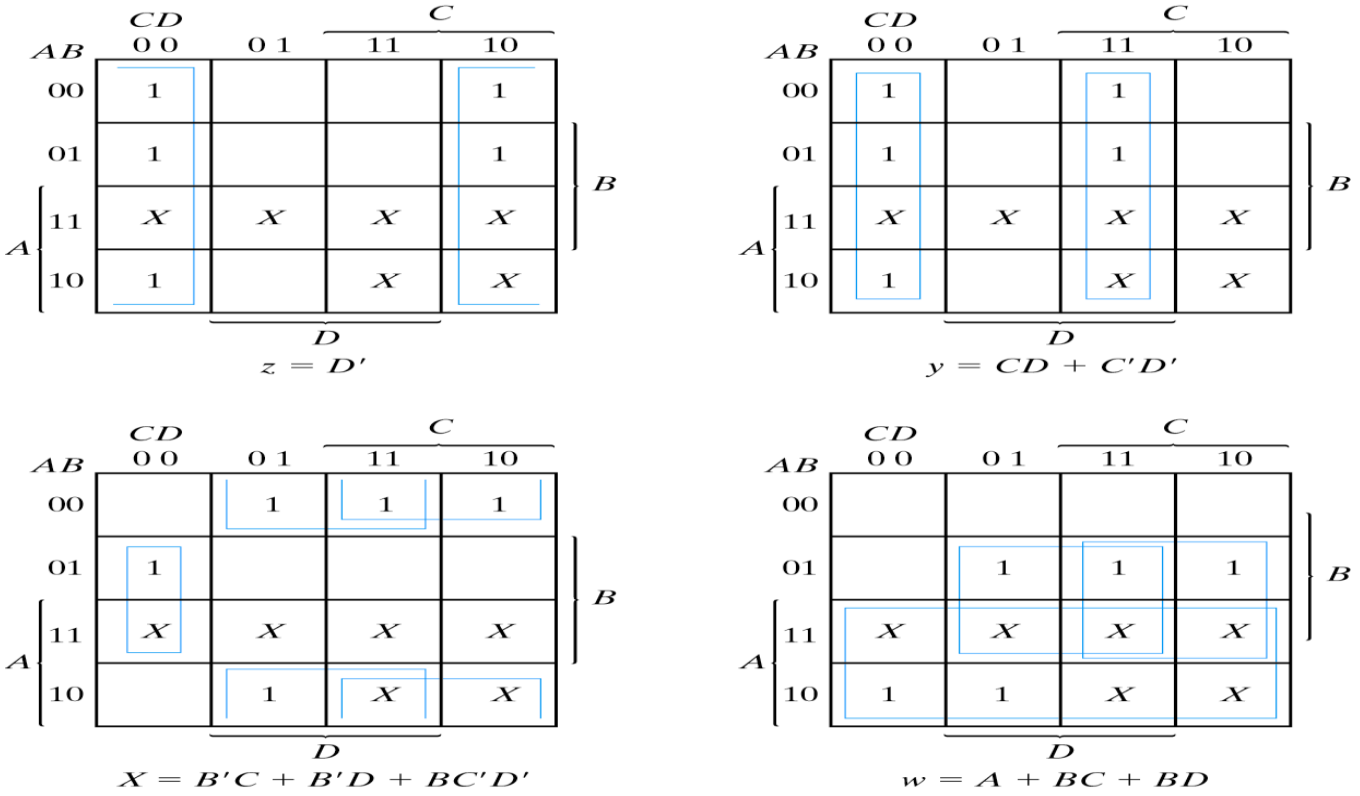

Fig. 4-3 Maps for BCD to Excess-3 Code Converter

Circuit implementation

z = D’; y = CD + C’D’ = CD + (C + D)’

x = B’C + B’D + BC’D’ = B’(C + D) + B(C + D)’

w = A + BC + BD = A + B(C + D)

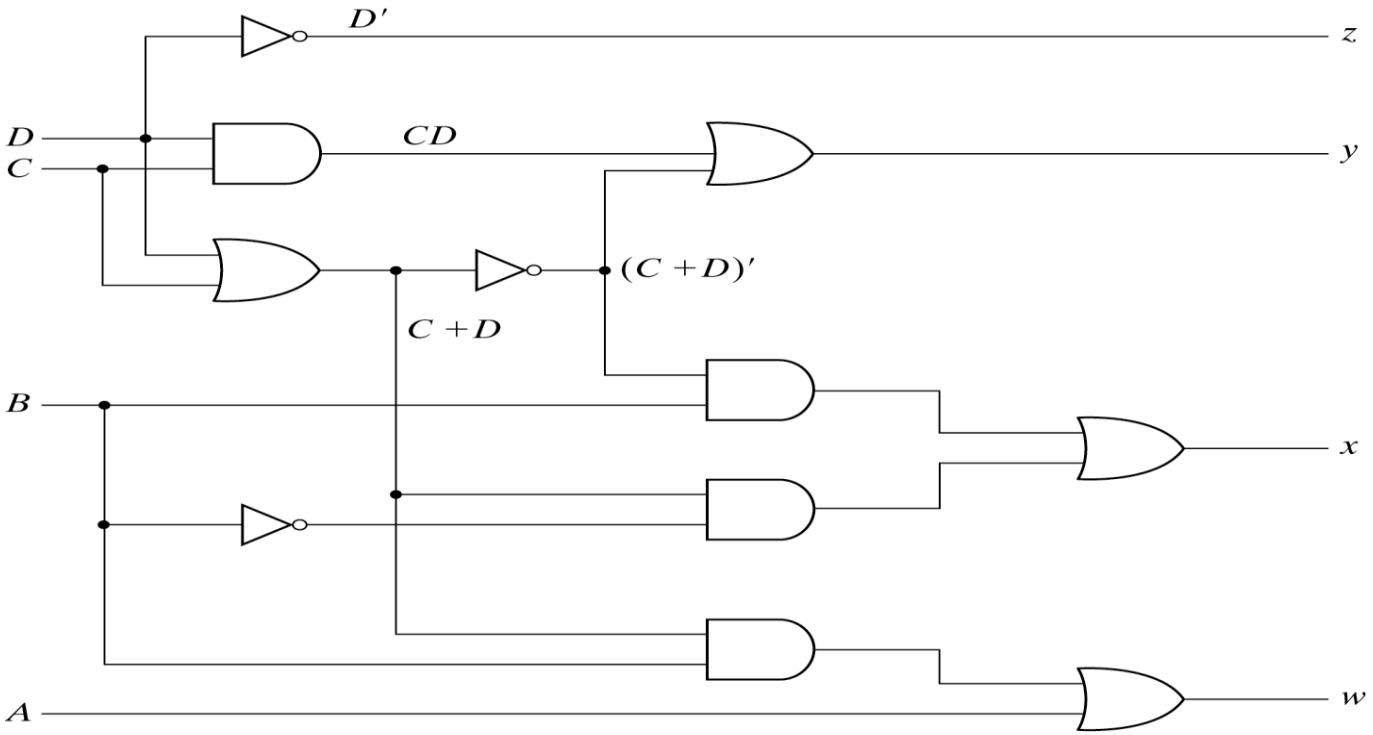

Fig. 4-4 Logic Diagram for BCD to Excess-3 Code Converter

4-4. Binary Adder-Subtractor

- A combinational circuit that performs the addition of two bits is called a half adder.
- The truth table for the half adder is listed below:

Table 4-3
Half Adder

x	y	C	S
0	0	0	0
0	1	0	1
1	0	0	1
1	1	1	0

S: Sum
C: Carry

$S = x'y + xy'$

$C = xy$

Implementation of Half-Adder

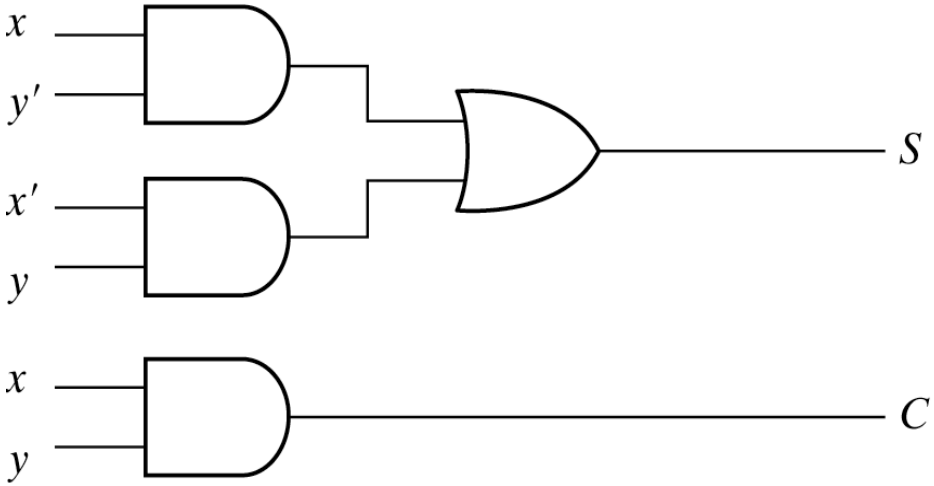

(a) $S = xy' + x'y$
$C = xy$

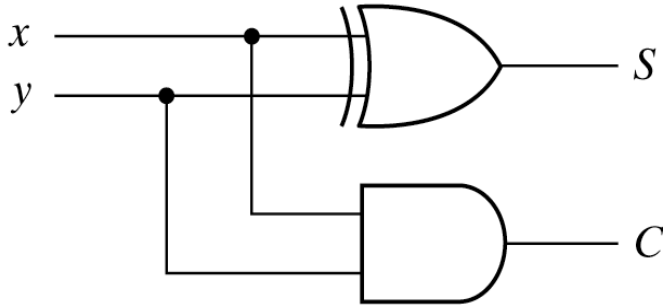

(b) $S = x \oplus y$
$C = xy$

Fig. 4-5 Implementation of Half-Adder

Full-Adder

- One that performs the addition of three bits(two significant bits and a previous carry) is a full adder.

Table 4-4
Full Adder

x	y	z	C	S
0	0	0	0	0
0	0	1	0	1
0	1	0	0	1
0	1	1	1	0
1	0	0	0	1
1	0	1	1	0
1	1	0	1	0
1	1	1	1	1

Simplified Expressions

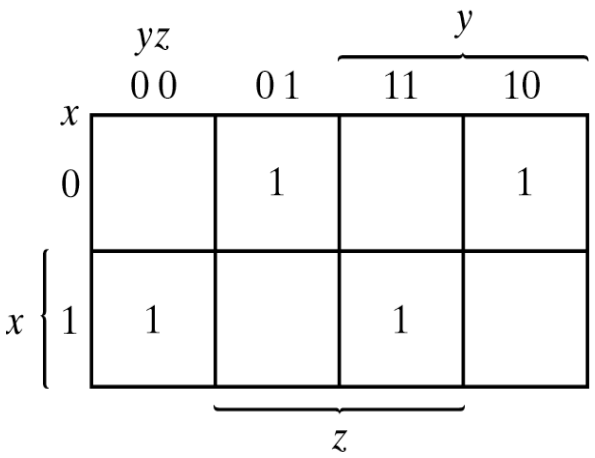

$S = x'y'z + x'yz' + xy'z' + xyz$

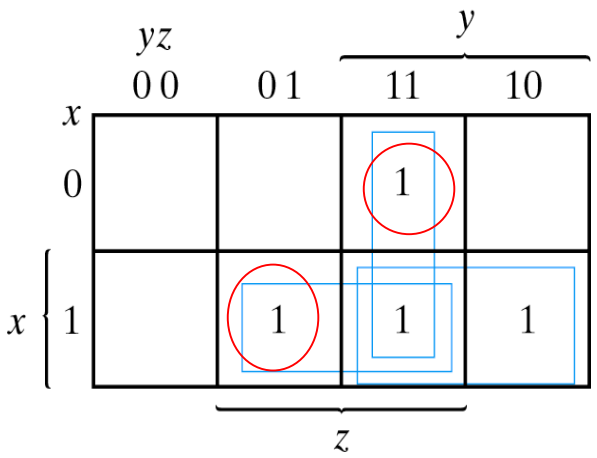

$C = xy + xz + yz$
$= xy + xy'z + x'yz$

Fig. 4-6 Maps for Full Adder

S = x'y'z + x'yz' + xy'z' + xyz

C = xy + xz + yz

Full adder implemented in SOP

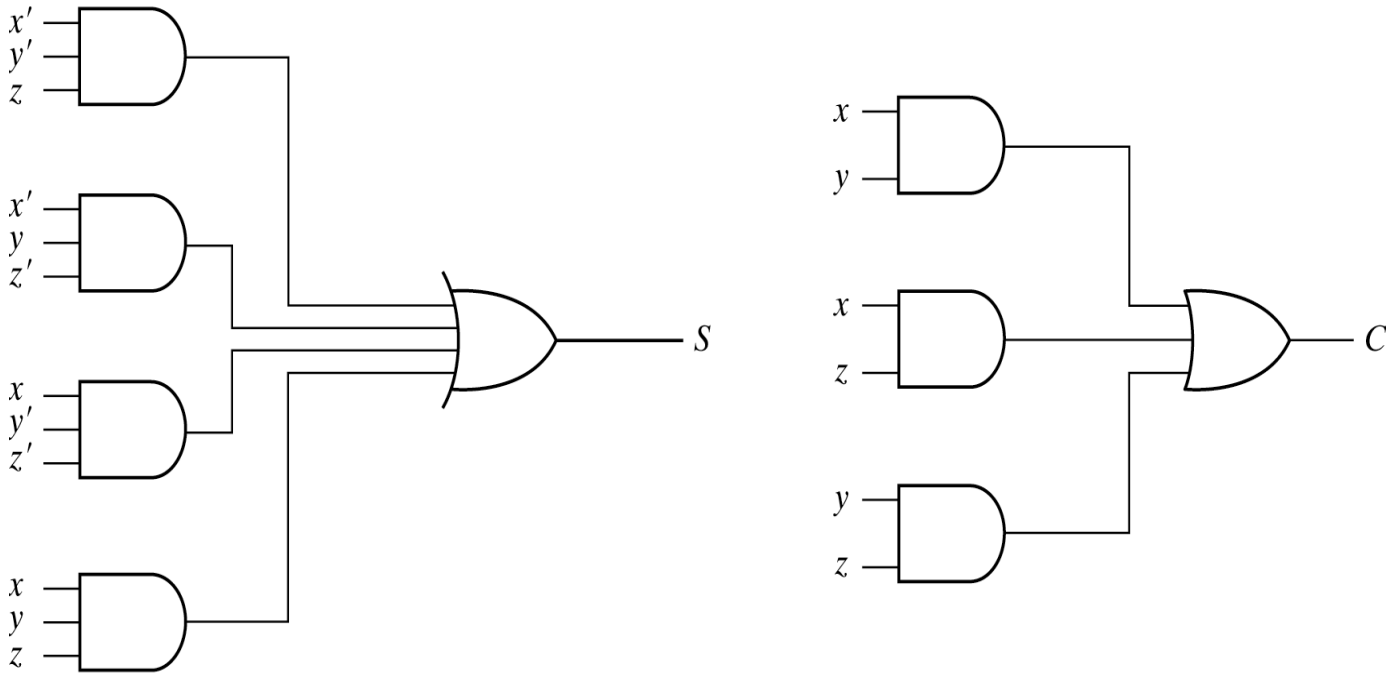

Fig. 4-7 Implementation of Full Adder in Sum of Products

Another implementation

- Full-adder can also implemented with two half adders and one OR gate (Carry Look-Ahead adder).

$$S = z \oplus (x \oplus y)$$
$$= z'(xy' + x'y) + z(xy' + x'y)'$$
$$= xy'z' + x'yz' + xyz + x'y'z$$
$$C = z(xy' + x'y) + xy = xy'z + x'yz + xy$$

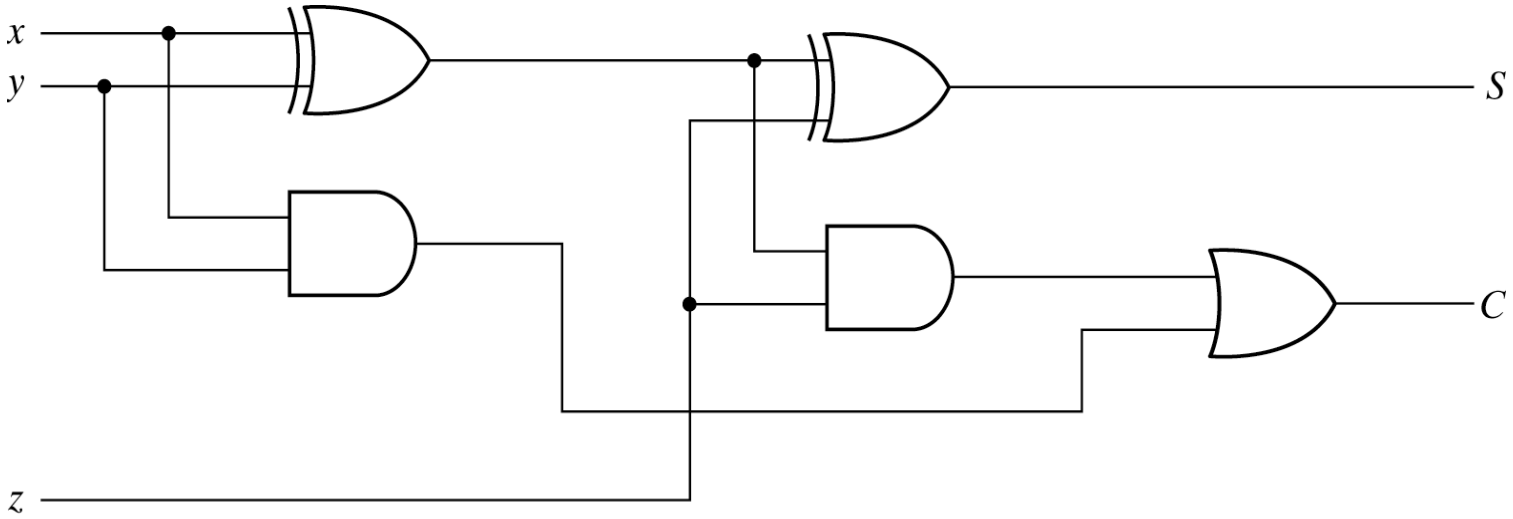

Fig. 4-8 Implementation of Full Adder with Two Half Adders and an OR Gate

Binary adder

- This is also called Ripple Carry Adder ,because of the construction with full adders are connected in cascade.

Subscript i:	3	2	1	0	
Input carry	0	1	1	0	C_i
Augend	1	0	1	1	A_i
Addend	0	0	1	1	B_i
Sum	1	1	1	0	S_i
Output carry	0	0	1	1	C_{i+1}

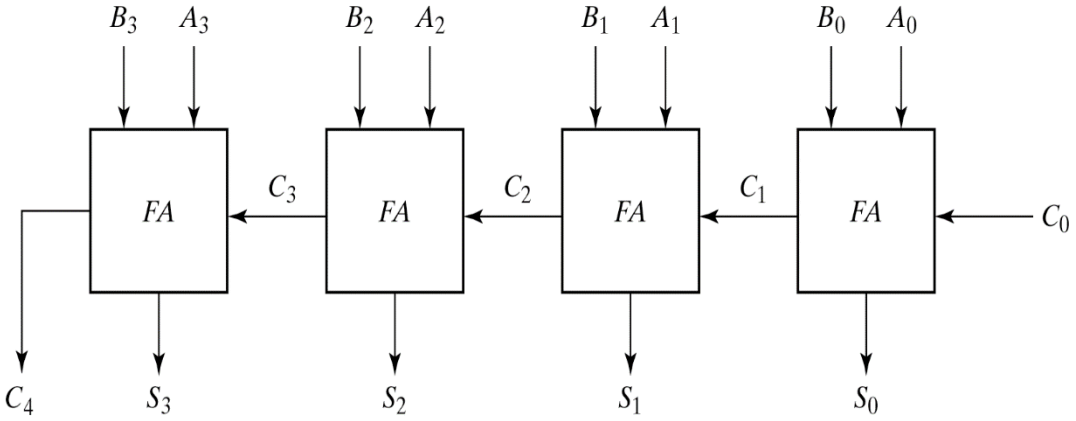

Fig. 4-9 4-Bit Adder

Carry Propagation

- Fig.4-9 causes a unstable factor on carry bit, and produces a longest propagation delay.
- The signal from C_i to the output carry C_{i+1}, propagates through an AND and OR gates, so, for an n-bit RCA, there are 2n gate levels for the carry to propagate from input to output.

Carry Propagation

- Because the propagation delay will affect the output signals on different time, so the signals are given enough time to get the precise and stable outputs.
- The most widely used technique employs the principle of carry look-ahead to improve the speed of the algorithm.

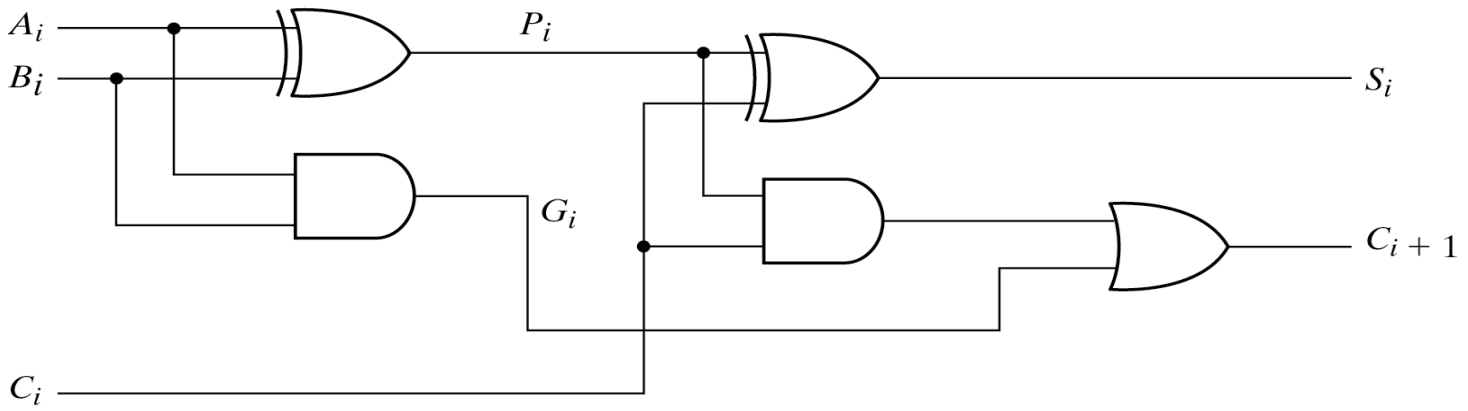

Fig. 4-10 Full Adder with P and G Shown

Boolean functions

$P_i = A_i \oplus B_i$ steady state value

$G_i = A_iB_i$ steady state value

Output sum and carry

$S_i = P_i \oplus C_i$

$C_{i+1} = G_i + P_iC_i$

G_i : carry generate P_i : carry propagate

C_0 = input carry

$C_1 = G_0 + P_0C_0$

$C_2 = G_1 + P_1C_1 = G_1 + P_1G_0 + P_1P_0C_0$

$C_3 = G_2 + P_2C_2 = G_2 + P_2G_1 + P_2P_1G_0 + P_2P_1P_0C_0$

- C_3 does not have to wait for C_2 and C_1 to propagate.

Logic diagram of carry look-ahead generator

- C_3 is propagated at the same time as C_2 and C_1.

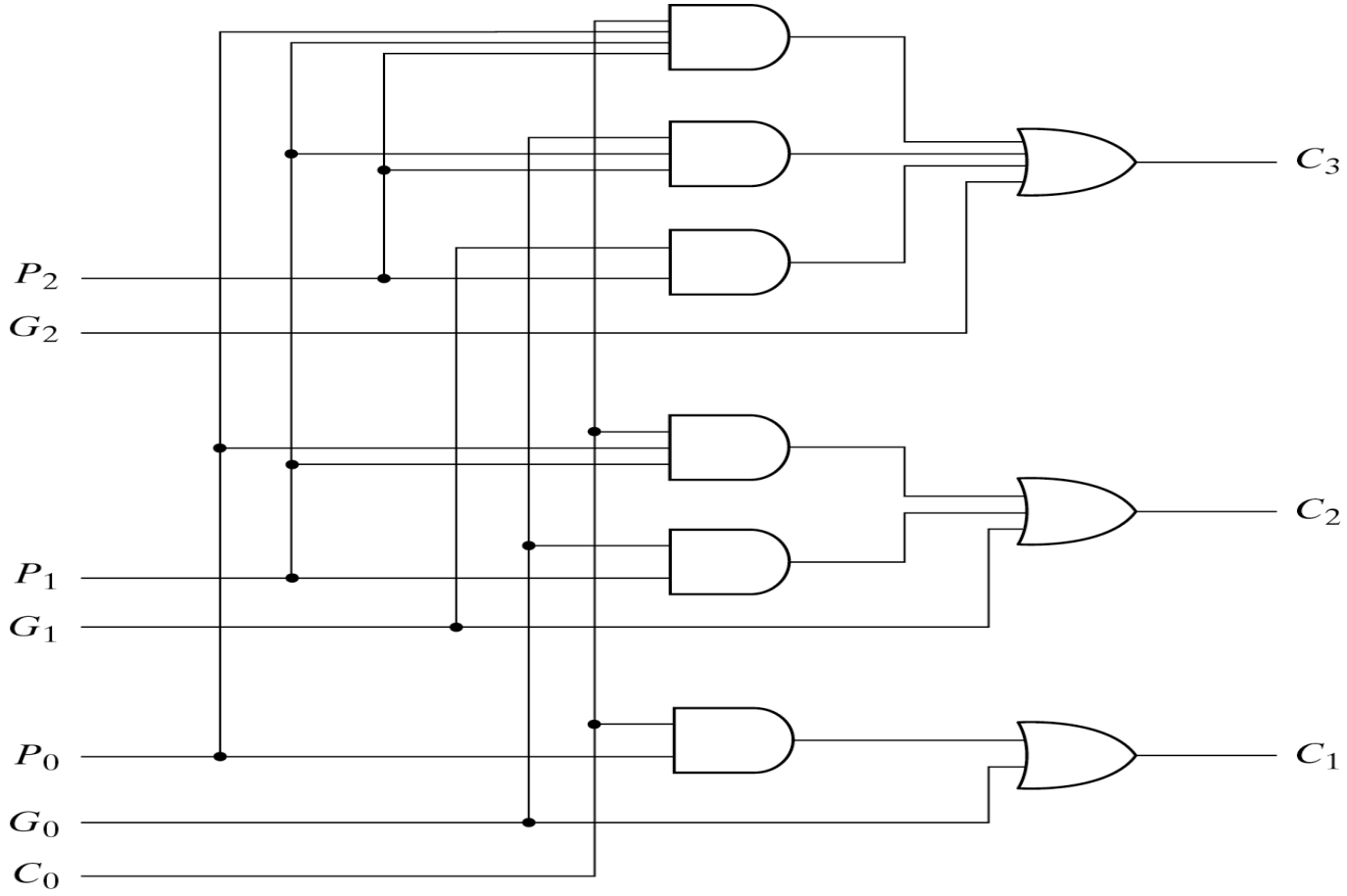

Fig. 4-11 Logic Diagram of Carry Lookahead Generator

4-bit adder with carry lookahead

- Delay time of n-bit CLAA = XOR + (AND + OR) + XOR

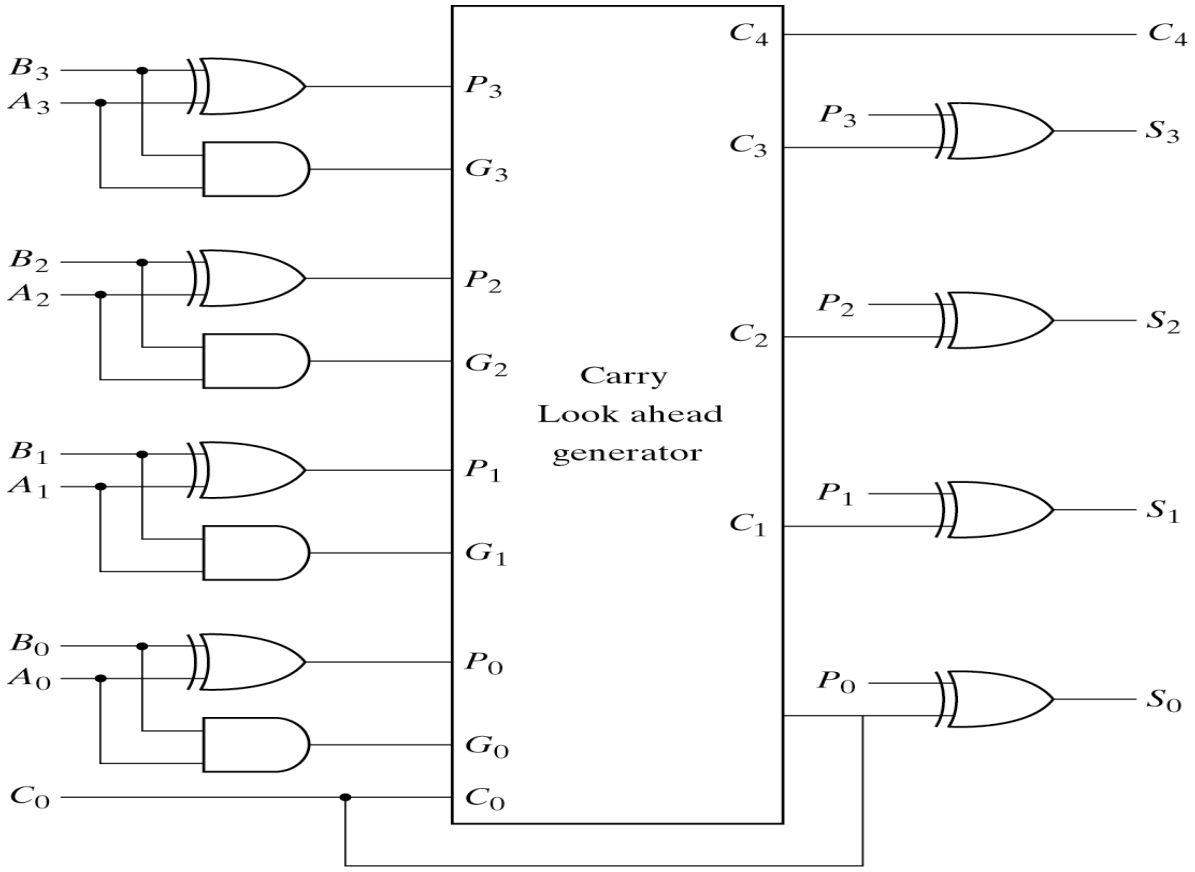

Fig. 4-12 4-Bit Adder with Carry Lookahead

Binary subtractor

M = 1→subtractor ; M = 0→adder

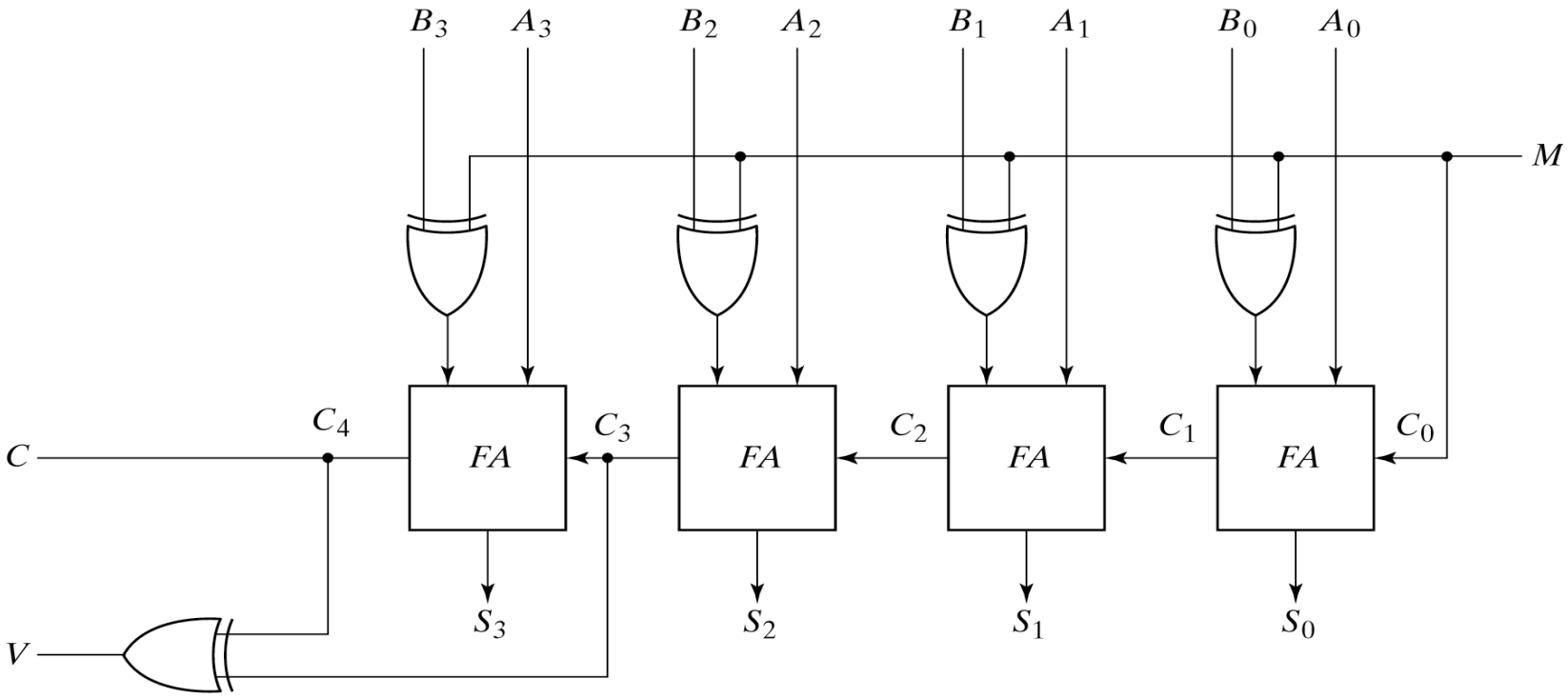

Fig. 4-13 4-Bit Adder Subtractor

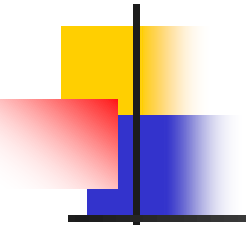

Overflow

- It is worth noting Fig.4-13 that binary numbers in the signed-complement system are added and subtracted by the same basic addition and subtraction rules as unsigned numbers.
- Overflow is a problem in digital computers because the number of bits that hold the number is finite and a result that contains n+1 bits cannot be accommodated.

Overflow on signed and unsigned

- When two unsigned numbers are added, an overflow is detected from the end carry out of the MSB position.
- When two signed numbers are added, the sign bit is treated as part of the number and the end carry does not indicate an overflow.
- An overflow cann't occur after an addition if one number is positive and the other is negative.
- An overflow may occur if the two numbers added are both positive or both negative.

4-5 Decimal adder

BCD adder can't exceed 9 on each input digit. K is the carry.

Table 4-5
Derivation of BCD Adder

Binary Sum					BCD Sum					Decimal
K	Z_8	Z_4	Z_2	Z_1	C	S_8	S_4	S_2	S_1	
0	0	0	0	0	0	0	0	0	0	0
0	0	0	0	1	0	0	0	0	1	1
0	0	0	1	0	0	0	0	1	0	2
0	0	0	1	1	0	0	0	1	1	3
0	0	1	0	0	0	0	1	0	0	4
0	0	1	0	1	0	0	1	0	1	5
0	0	1	1	0	0	0	1	1	0	6
0	0	1	1	1	0	0	1	1	1	7
0	1	0	0	0	0	1	0	0	0	8
0	1	0	0	1	0	1	0	0	1	9
0	1	0	1	0	1	0	0	0	0	10
0	1	0	1	1	1	0	0	0	1	11
0	1	1	0	0	1	0	0	1	0	12
0	1	1	0	1	1	0	0	1	1	13
0	1	1	1	0	1	0	1	0	0	14
0	1	1	1	1	1	0	1	0	1	15
1	0	0	0	0	1	0	1	1	0	16
1	0	0	0	1	1	0	1	1	1	17
1	0	0	1	0	1	1	0	0	0	18
1	0	0	1	1	1	1	0	0	1	19

Rules of BCD adder

- When the binary sum is greater than 1001, we obtain a non-valid BCD representation.
- The addition of binary 6(0110) to the binary sum converts it to the correct BCD representation and also produces an output carry as required.
- To distinguish them from binary 1000 and 1001, which also have a 1 in position Z_8, we specify further that either Z_4 or Z_2 must have a 1.

$$C = K + Z_8Z_4 + Z_8Z_2$$

Implementation of BCD adder

- A decimal parallel adder that adds n decimal digits needs n BCD adder stages.
- The output carry from one stage must be connected to the input carry of the next higher-order stage.

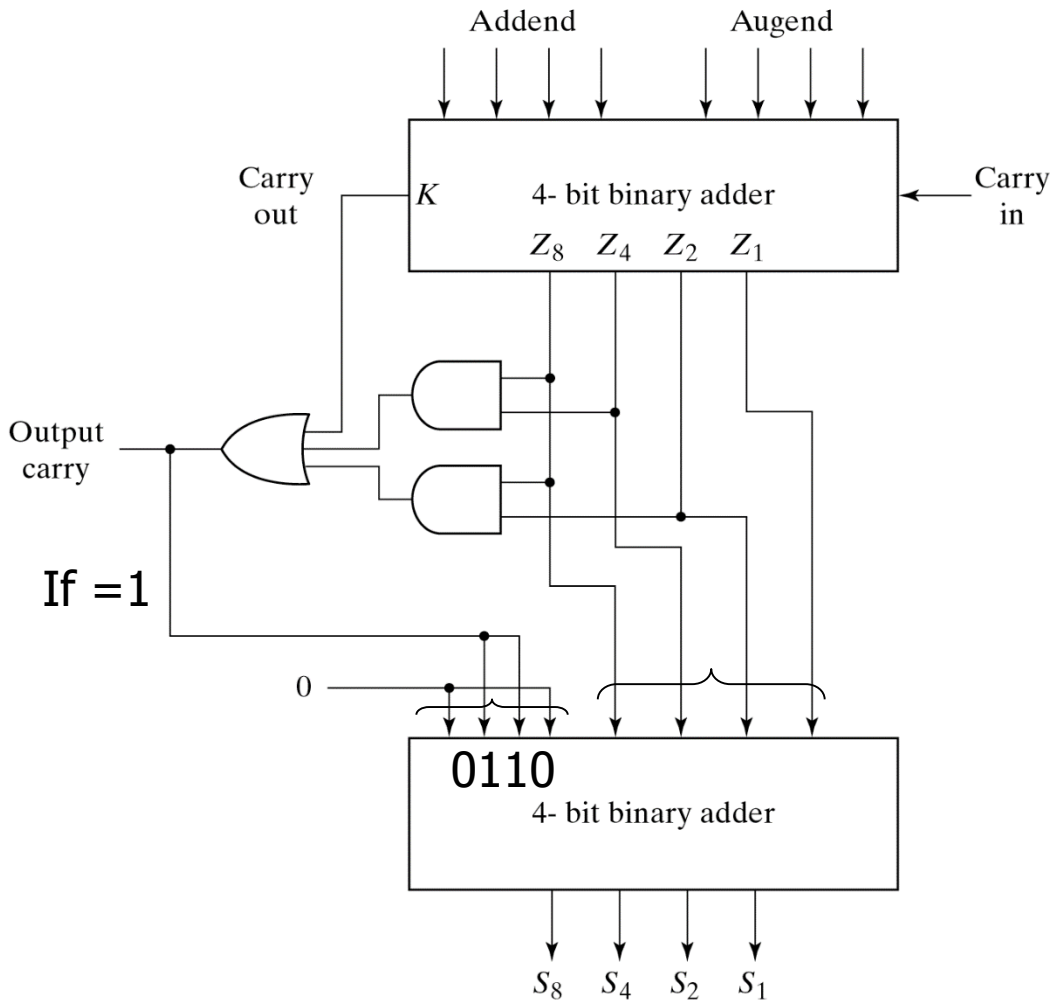

Fig. 4-14 Block Diagram of a BCD Adder

4-6. Binary multiplier

- Usually there are more bits in the partial products and it is necessary to use full adders to produce the sum of the partial products.

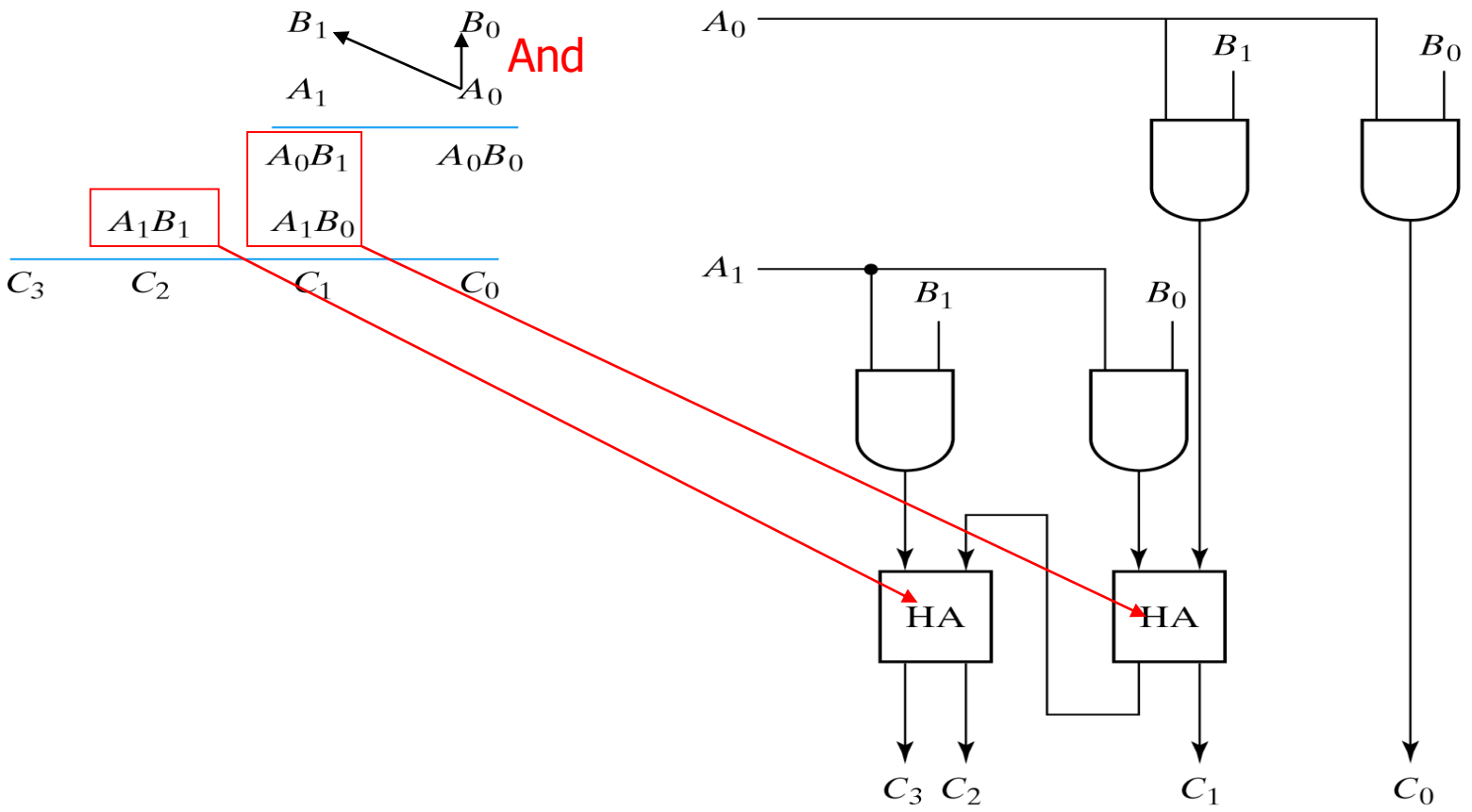

Fig. 4-15 2-Bit by 2-Bit Binary Multiplier

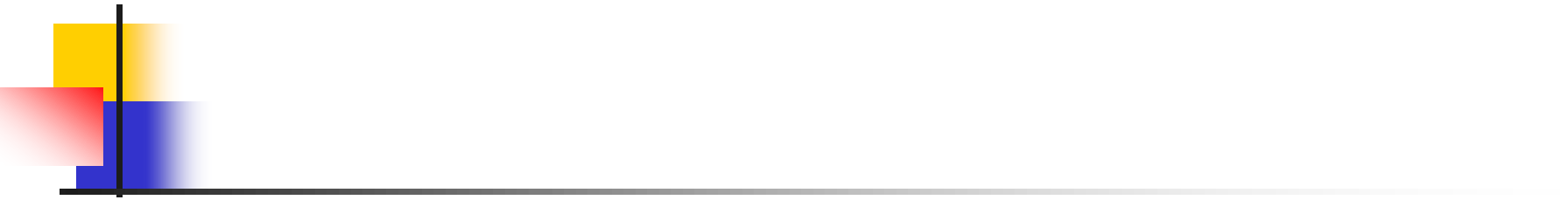

4-bit by 3-bit binary multiplier

4-bit by 3-bit binary multiplier

- For J multiplier bits and K multiplicand bits we need (J X K) AND gates and (J – 1) K-bit adders to produce a product of J+K bits.
- K=4 and J=3, we need 12 AND gates and two 4-bit adders.

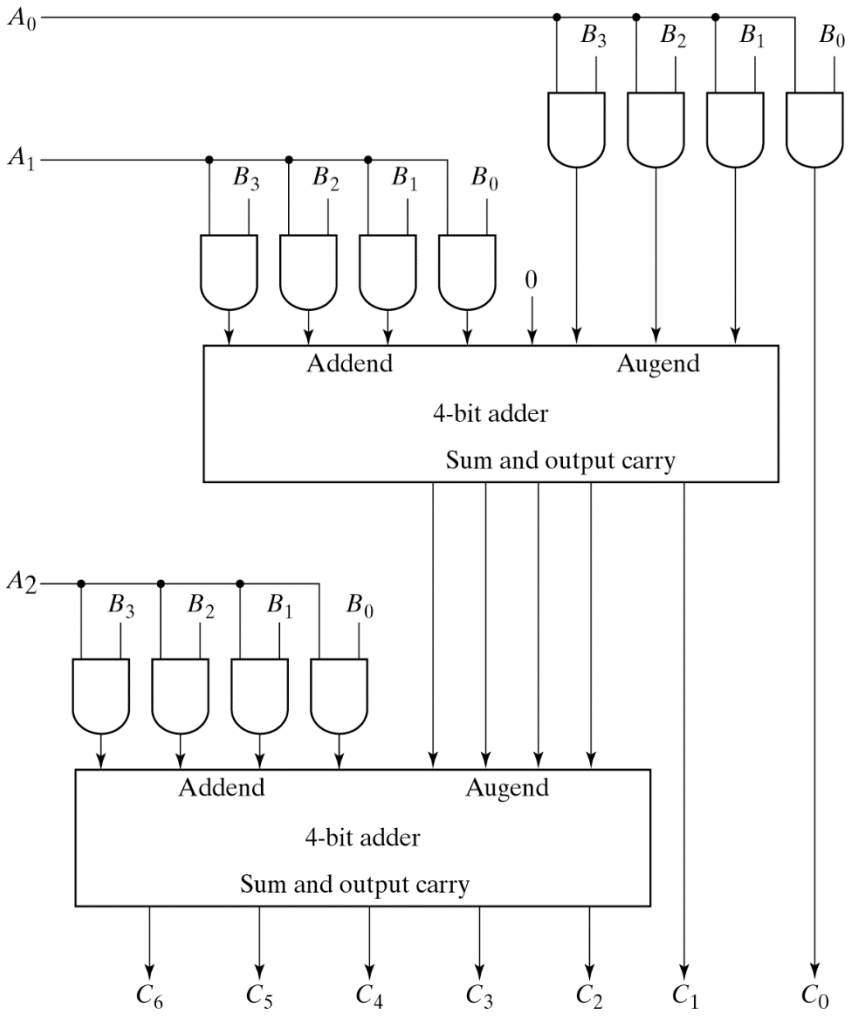

Fig. 4-16 4-Bit by 3-Bit Binary Multiplier

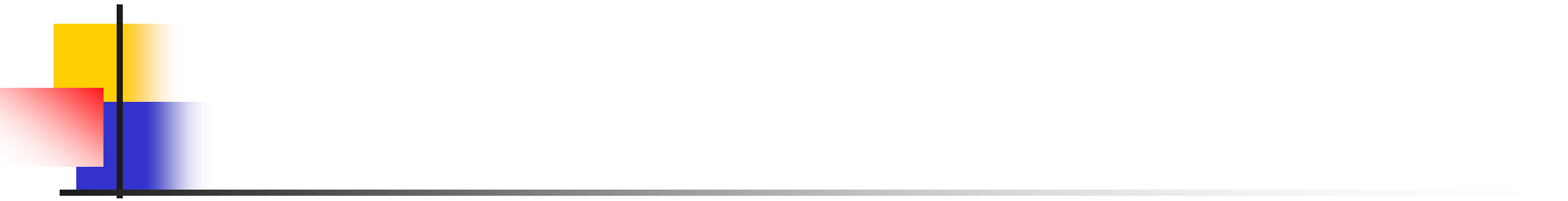

Magnitude comparator

4-7. Magnitude comparator

- The equality relation of each pair of bits can be expressed logically with an exclusive-NOR function as:

$A = A_3A_2A_1A_0$; $B = B_3B_2B_1B_0$

$x_i = A_iB_i + A_i'B_i'$ for i = 0, 1, 2, 3

$(A = B) = x_3x_2x_1x_0$

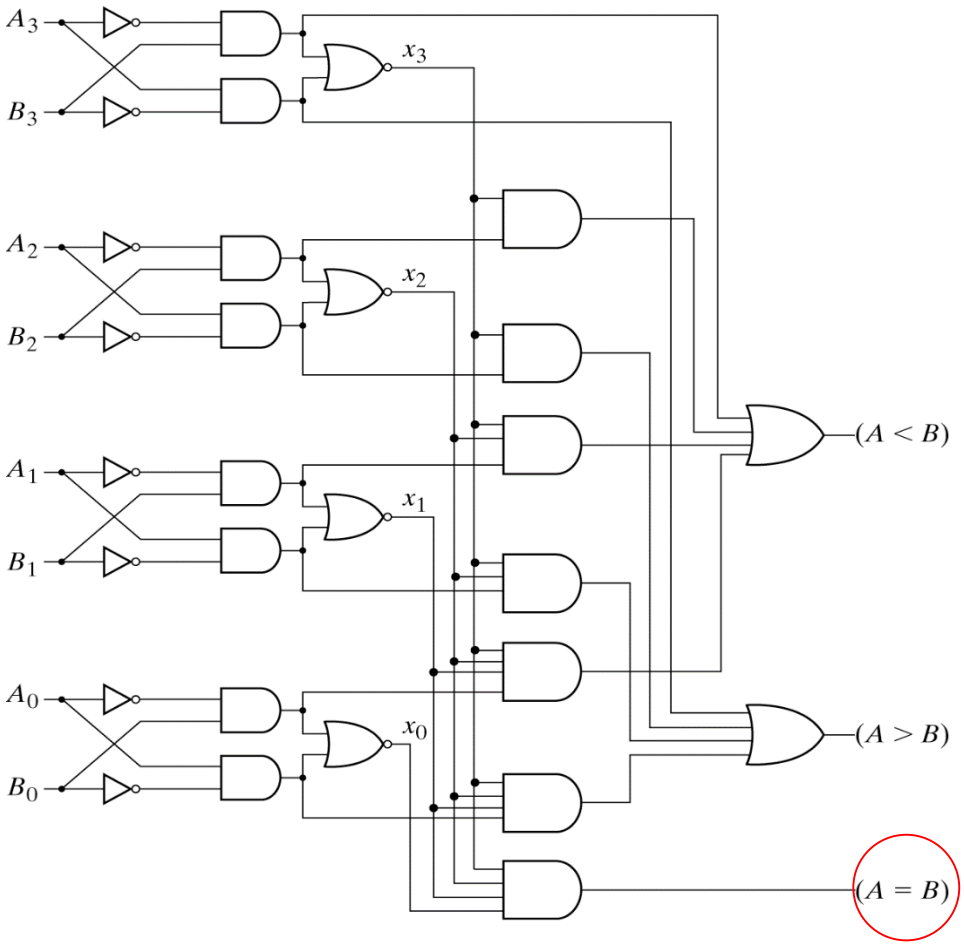

Fig. 4-17 4-Bit Magnitude Comparator

Magnitude comparator

- We inspect the relative magnitudes of pairs of MSB. If equal, we compare the next lower significant pair of digits until a pair of unequal digits is reached.
- If the corresponding digit of A is 1 and that of B is 0, we conclude that A>B.

$(A>B)=$

$A_3B'_3+x_3A_2B'_2+x_3x_2A_1B'_1+x_3x_2x_1A_0B'_0$

$(A<B)=$

$A'_3B_3+x_3A'_2B_2+x_3x_2A'_1B_1+x_3x_2x_1A'_0B_0$

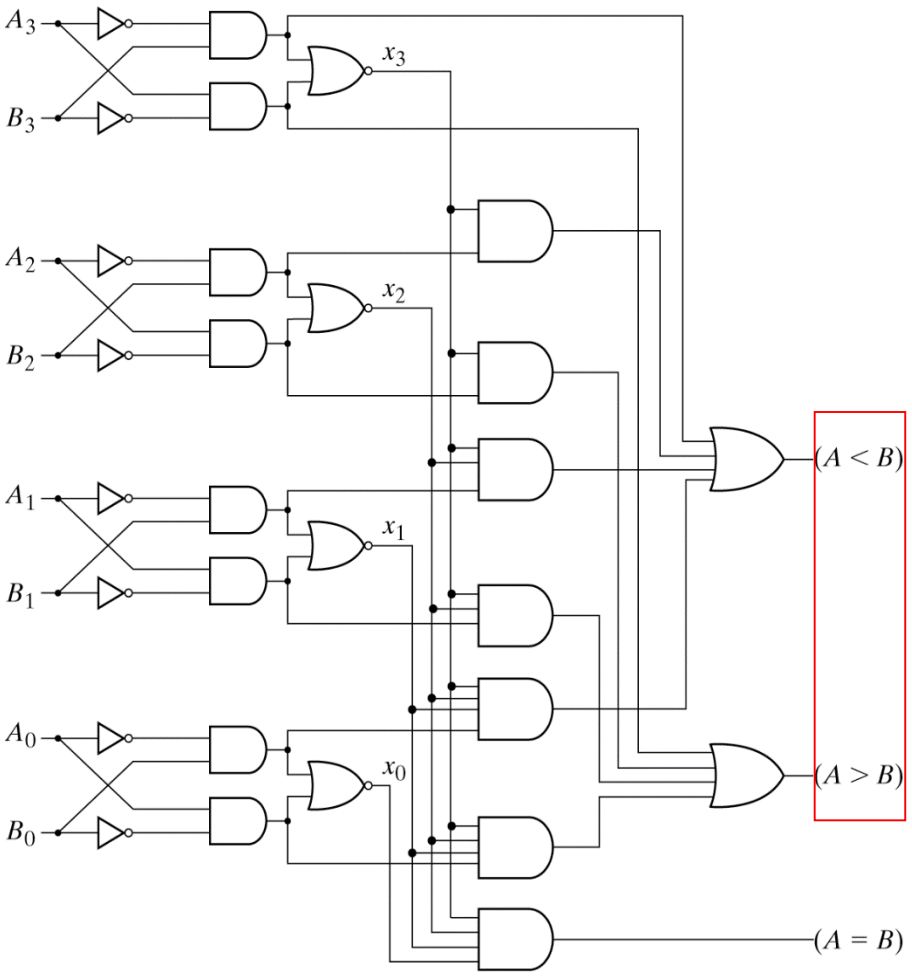

Fig. 4-17 4-Bit Magnitude Comparator

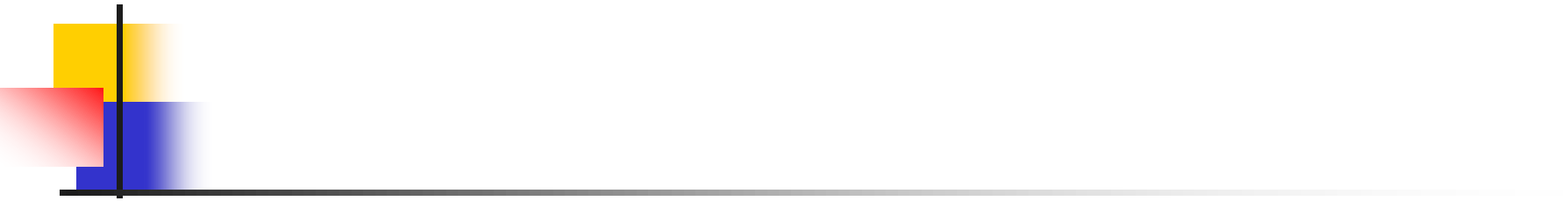

Decoder

4-8. Decoders

- The decoder is called n-to-m-line decoder, where $m \leq 2^n$.
- the decoder is also used in conjunction with other code converters such as a BCD-to-seven_segment decoder.
- 3-to-8 line decoder: For each possible input combination, there are seven outputs that are equal to 0 and only one that is equal to 1.

Implementation and truth table

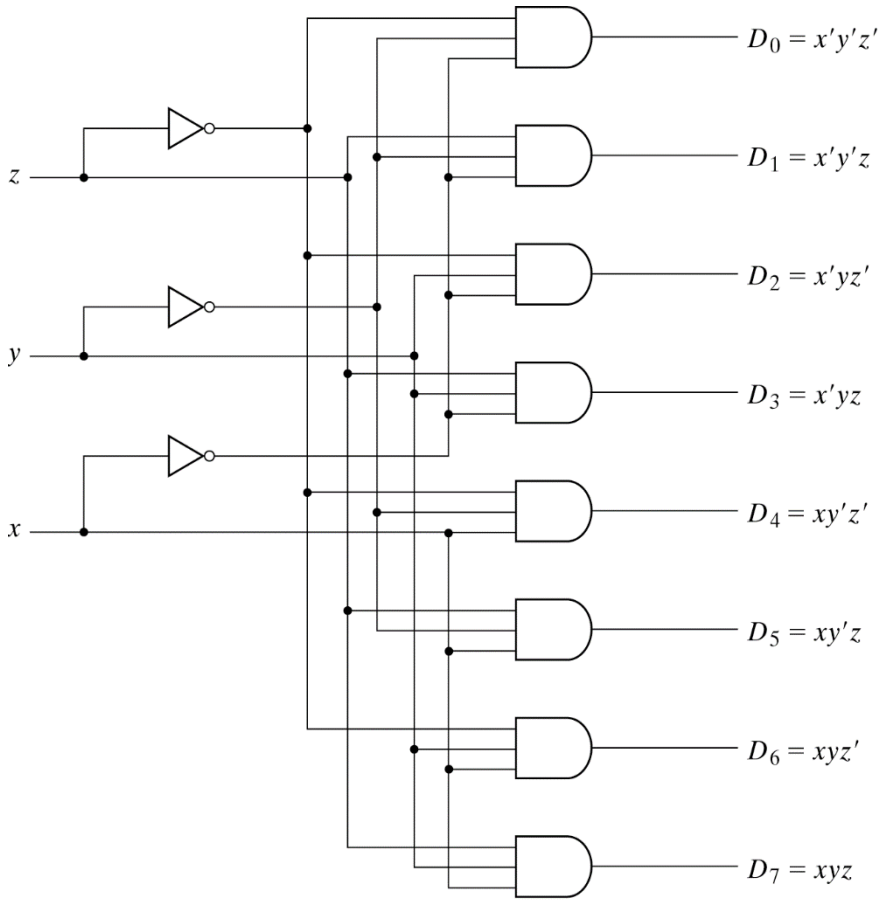

Fig. 4-18 3-to-8-Line Decoder

Table 4-6
Truth Table of a 3-to-8-Line Decoder

Inputs			Outputs							
x	y	z	D_0	D_1	D_2	D_3	D_4	D_5	D_6	D_7
0	0	0	1	0	0	0	0	0	0	0
0	0	1	0	1	0	0	0	0	0	0
0	1	0	0	0	1	0	0	0	0	0
0	1	1	0	0	0	1	0	0	0	0
1	0	0	0	0	0	0	1	0	0	0
1	0	1	0	0	0	0	0	1	0	0
1	1	0	0	0	0	0	0	0	1	0
1	1	1	0	0	0	0	0	0	0	1

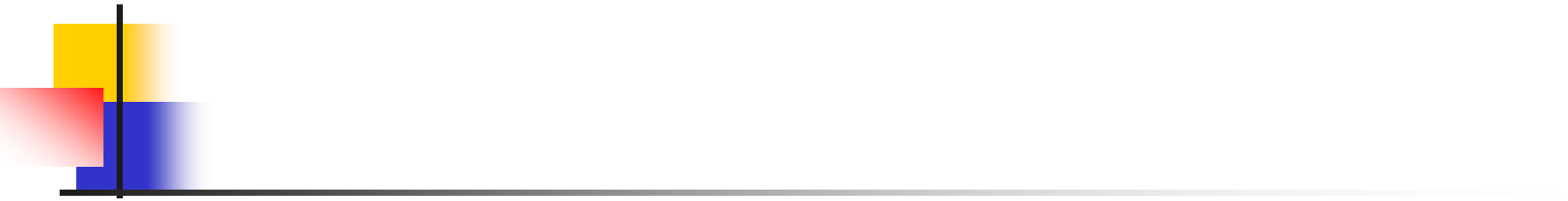

Decoder with enable input

Decoder with enable input

- Some decoders are constructed with NAND gates, it becomes more economical to generate the decoder minterms in their complemented form.
- As indicated by the truth table , only one output can be equal to 0 at any given time, all other outputs are equal to 1.

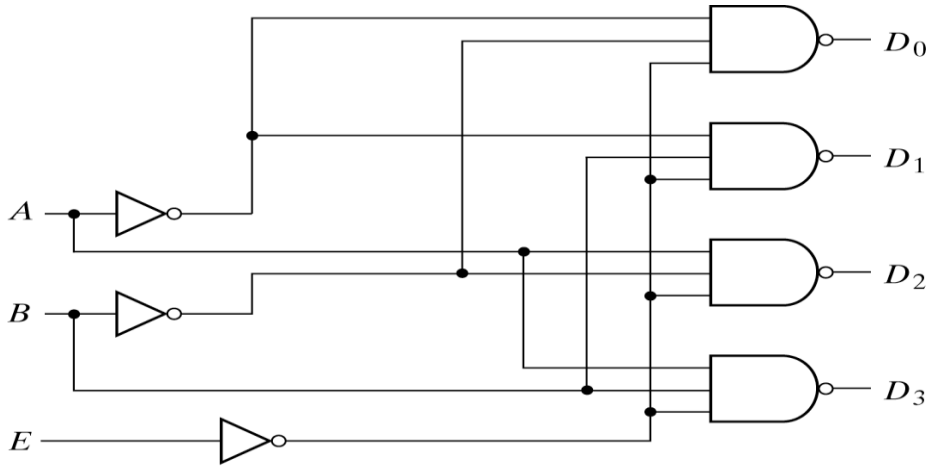

(a) Logic diagram

E	A	B	D_0	D_1	D_2	D_3
1	X	X	1	1	1	1
0	0	0	0	1	1	1
0	0	1	1	0	1	1
0	1	0	1	1	0	1
0	1	1	1	1	1	0

(b) Truth table

Fig. 4-19 2-to-4-Line Decoder with Enable Input

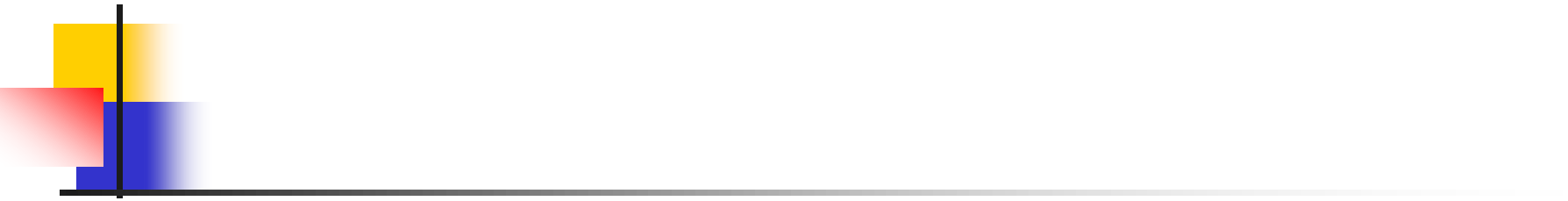

Demultiplexer

Demultiplexer

- A decoder with an enable input is referred to as a decoder/demultiplexer.
- The truth table of demultiplexer is the same with decoder.

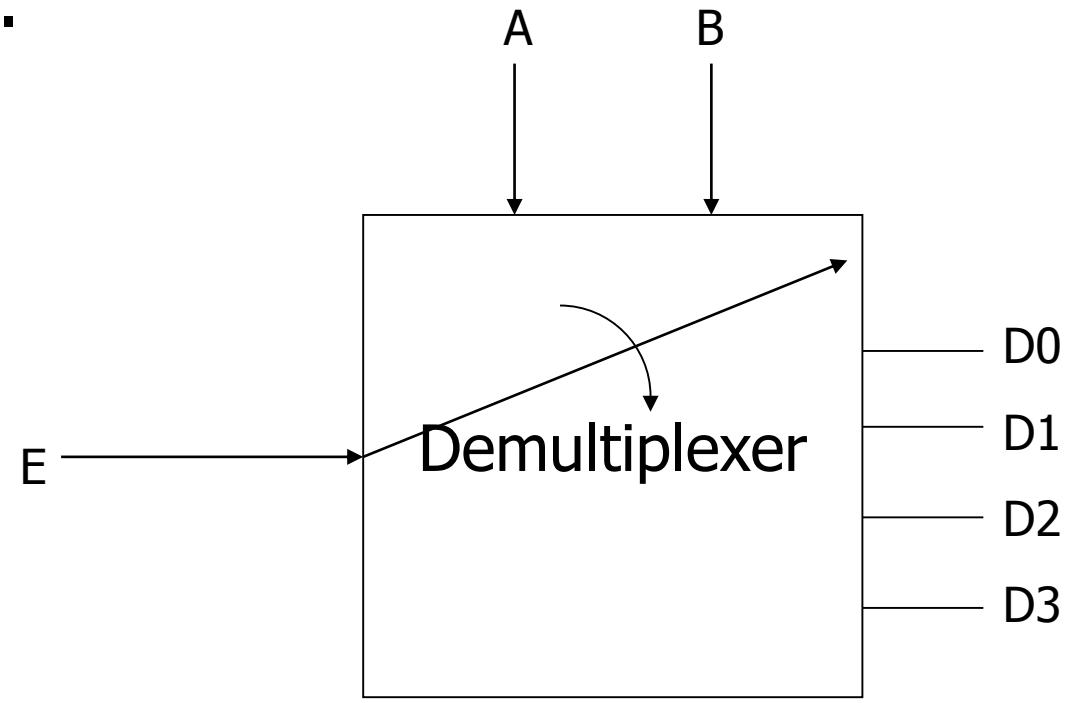

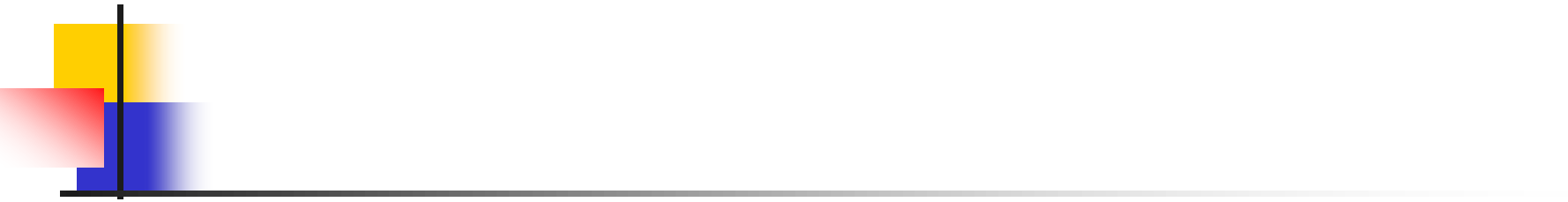

Decoder using smaller components

3-to-8 decoder with enable implement the 4-to-16 decoder

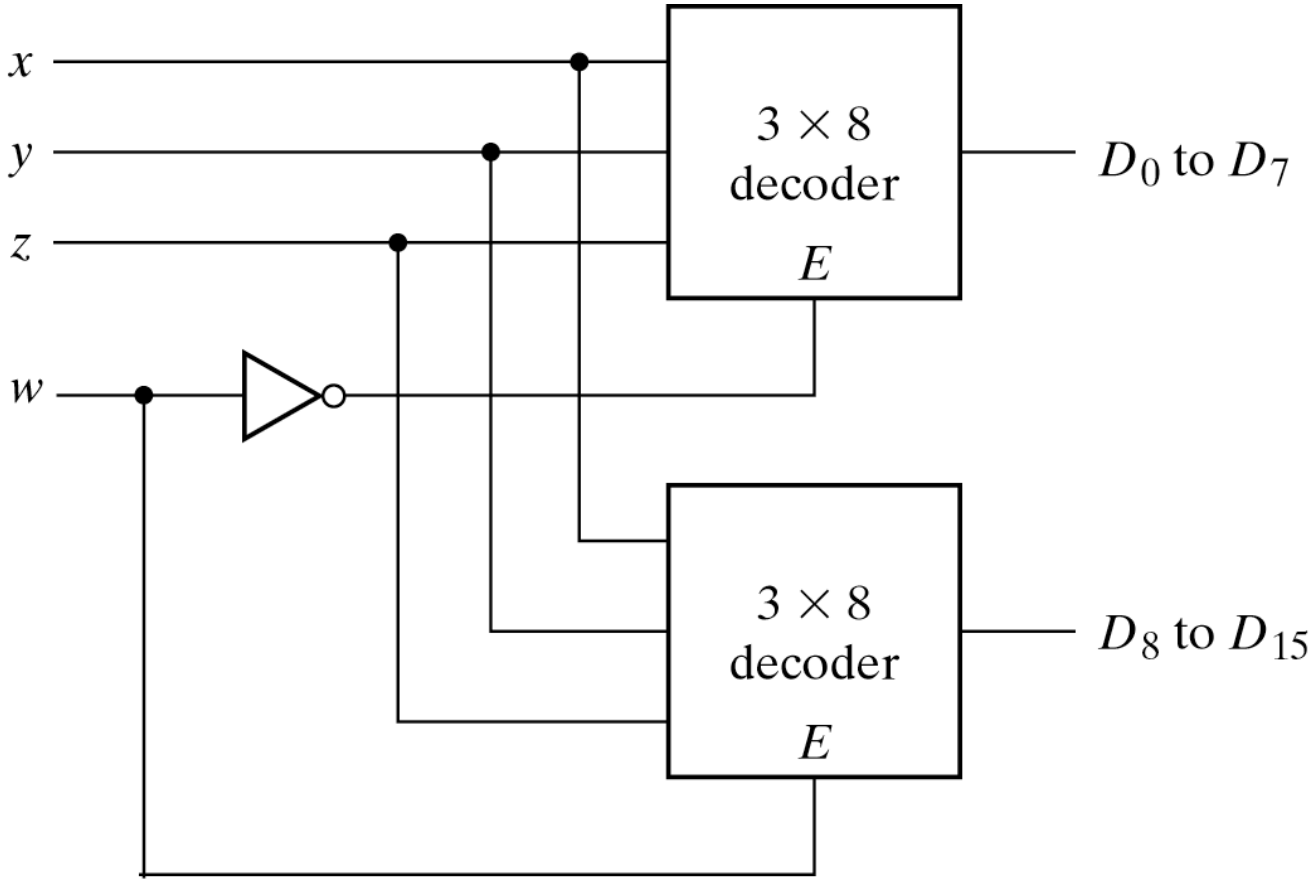

Fig. 4-20 4 × 16 Decoder Constructed with Two 3 × 8 Decoders

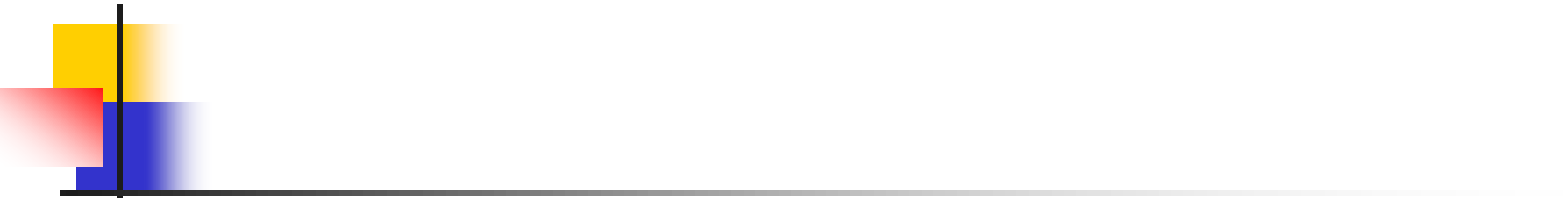

Decoder Application

Implementation of a Full Adder with a Decoder

- From table 4-4, we obtain the functions for the combinational circuit in sum of minterms:

$$S(x, y, z) = \Sigma(1, 2, 4, 7)$$

$$C(x, y, z) = \Sigma(3, 5, 6, 7)$$

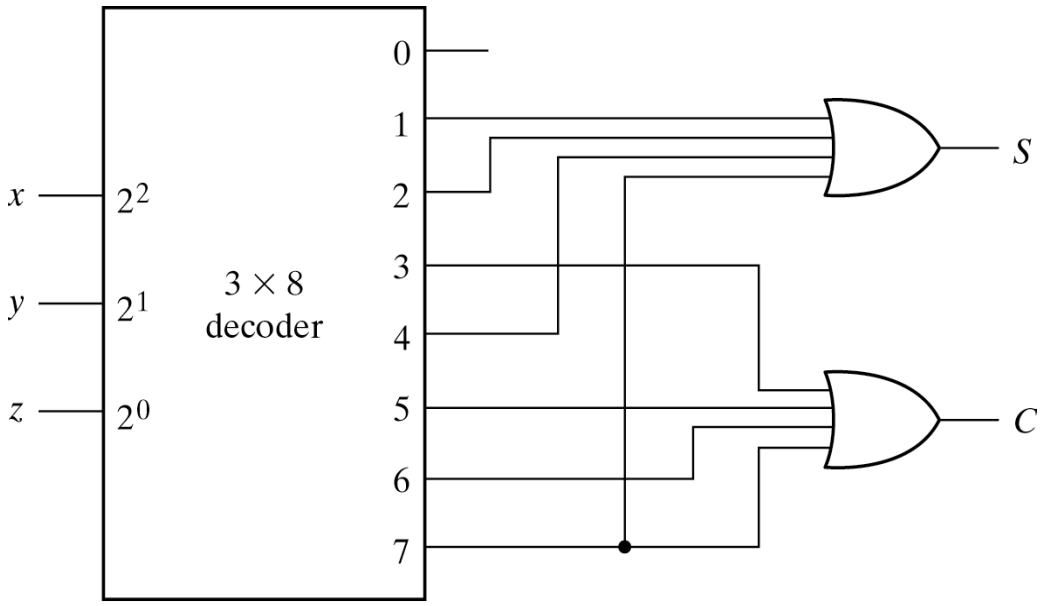

Fig. 4-21 Implementation of a Full Adder with a Decoder

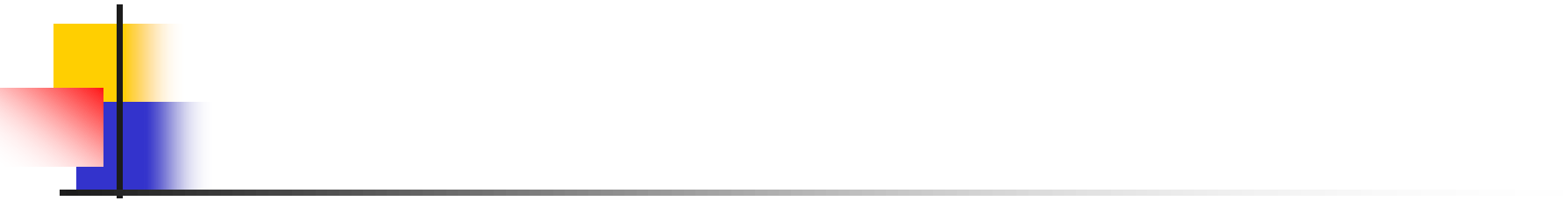

Encoder

4-9. Encoders

- An encoder is the inverse operation of a decoder.
- We can derive the Boolean functions by table 4-7

$$z = D_1 + D_3 + D_5 + D_7$$
$$y = D_2 + D_3 + D_6 + D_7$$
$$x = D_4 + D_5 + D_6 + D_7$$

Table 4-7
Truth Table of Octal-to-Binary Encoder

Inputs								Outputs		
D_0	D_1	D_2	D_3	D_4	D_5	D_6	D_7	x	y	z
1	0	0	0	0	0	0	0	0	0	0
0	1	0	0	0	0	0	0	0	0	1
0	0	1	0	0	0	0	0	0	1	0
0	0	0	1	0	0	0	0	0	1	1
0	0	0	0	1	0	0	0	1	0	0
0	0	0	0	0	1	0	0	1	0	1
0	0	0	0	0	0	1	0	1	1	0
0	0	0	0	0	0	0	1	1	1	1

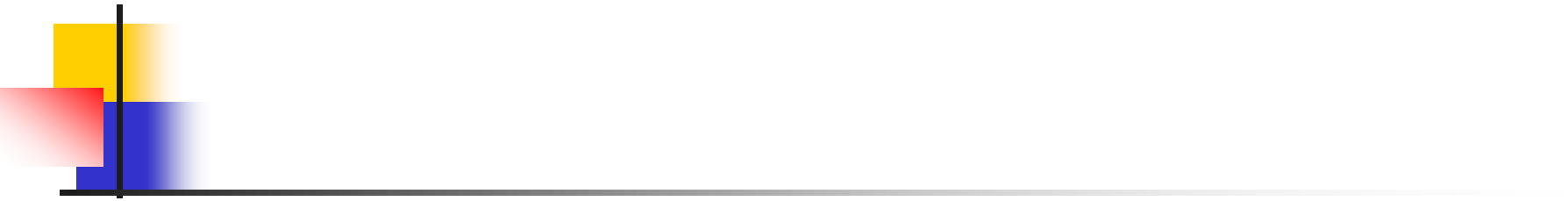

Priority Encoder

Priority encoder

- If two inputs are active simultaneously, the output produces an undefined combination. We can establish an input priority to ensure that only one input is encoded.
- Another ambiguity in the octal-to-binary encoder is that an output with all 0's is generated when all the inputs are 0; the output is the same as when D_0 is equal to 1.
- The discrepancy tables on Table 4-7 and Table 4-8 can resolve aforesaid condition by providing one more output to indicate that at least one input is equal to 1.

Priority encoder

V=0→no valid inputs

V=1→valid inputs

X's in output columns represent don't-care conditions

X's in the input columns are useful for representing a truth table in condensed form.

Instead of listing all 16 minterms of four variables.

Table 4-8
Truth Table of a Priority Encoder

Inputs				Outputs		
D_0	D_1	D_2	D_3	x	y	V
0	0	0	0	X	X	0
1	0	0	0	0	0	1
X	1	0	0	0	1	1
X	X	1	0	1	0	1
X	X	X	1	1	1	1

4-input priority encoder

- Implementation of table 4-8

$x = D_2 + D_3$

$y = D_3 + D_1D'_2$

$V = D_0 + D_1 + D_2 + D_3$

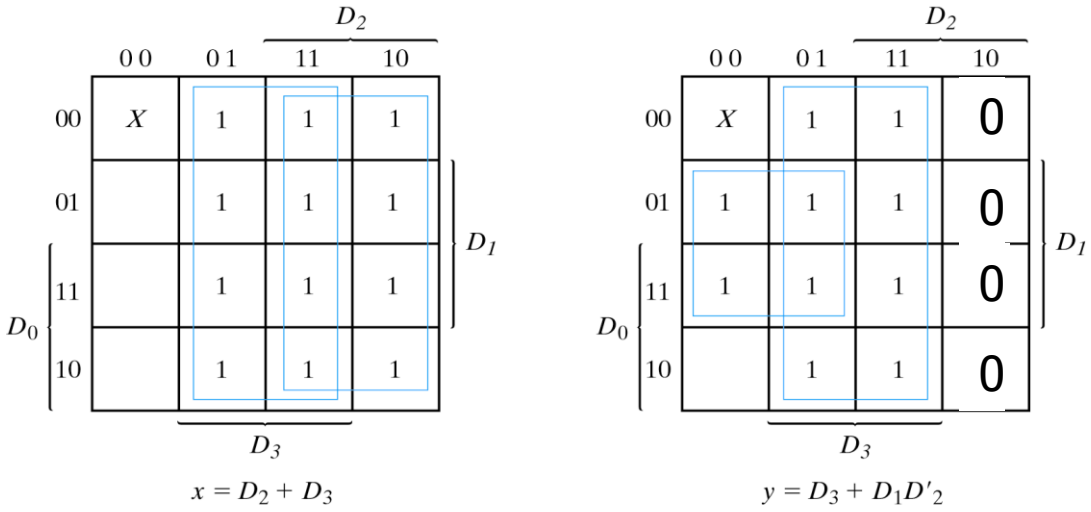

Fig. 4-22 Maps for a Priority Encoder

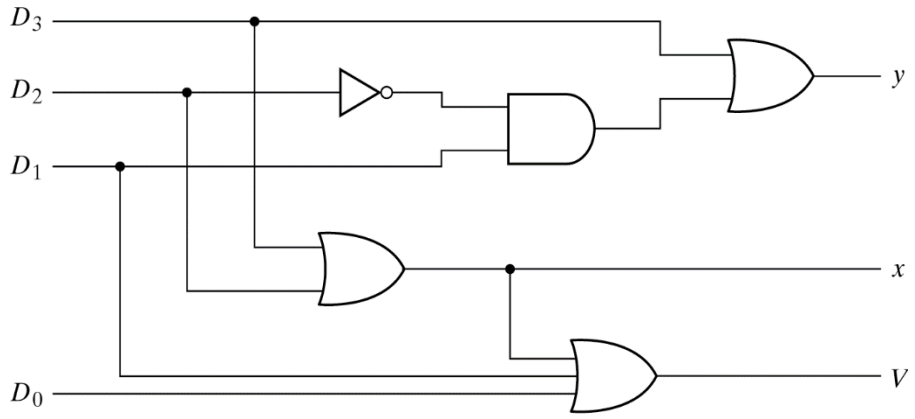

Fig. 4-23 4-Input Priority Encoder

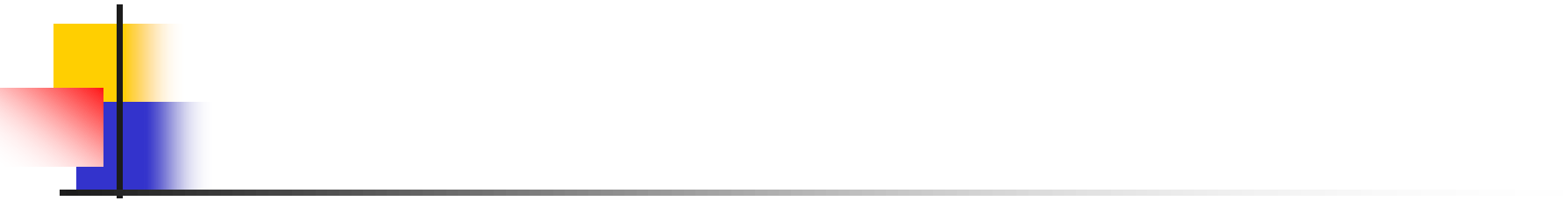

Multiplexer

4-10. Multiplexers

$S = 0, Y = I_0$

$S = 1, Y = I_1$

Truth Table→

S	Y
0	I_0
1	I_1

$Y = S'I_0 + SI_1$

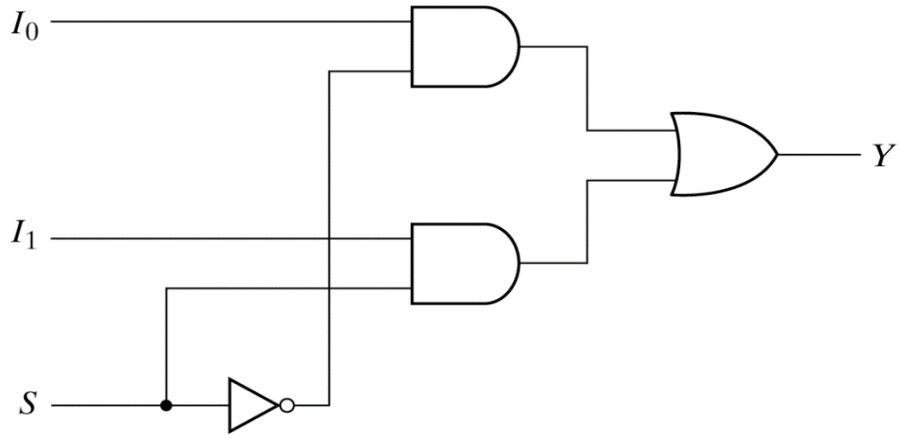

(a) Logic diagram

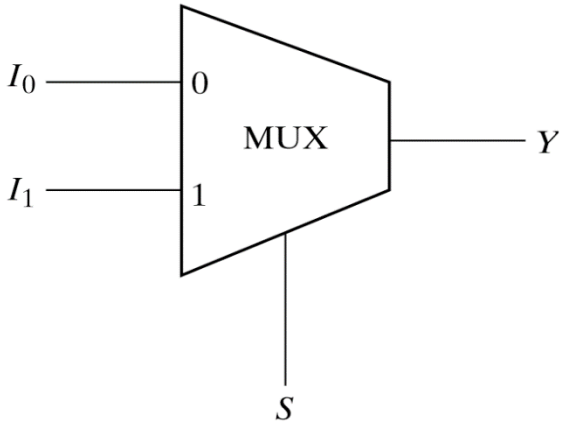

(b) Block diagram

Fig. 4-24 2-to-1-Line Multiplexer

4-to-1 Line Multiplexer

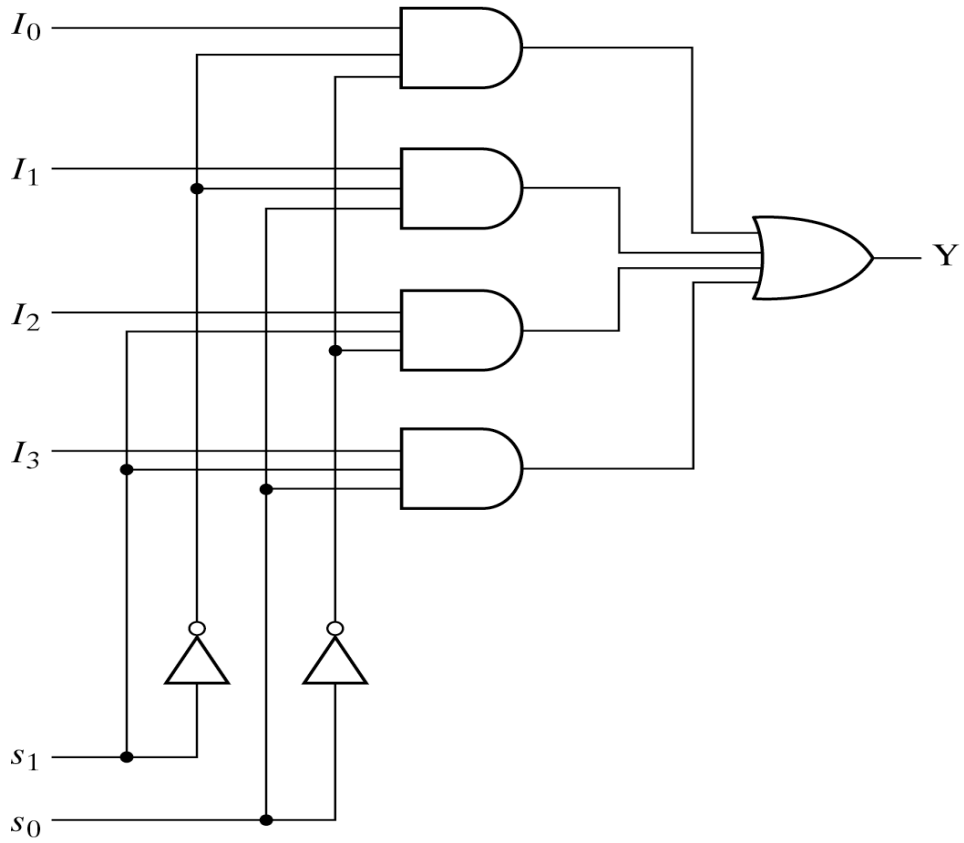

(a) Logic diagram

s_1	s_0	Y
0	0	I_0
0	1	I_1
1	0	I_2
1	1	I_3

(b) Function table

Fig. 4-25 4-to-1-Line Multiplexer

Quadruple 2-to-1 Line Multiplexer

- Multiplexer circuits can be combined with common selection inputs to provide multiple-bit selection logic. Compare with Fig4-24.

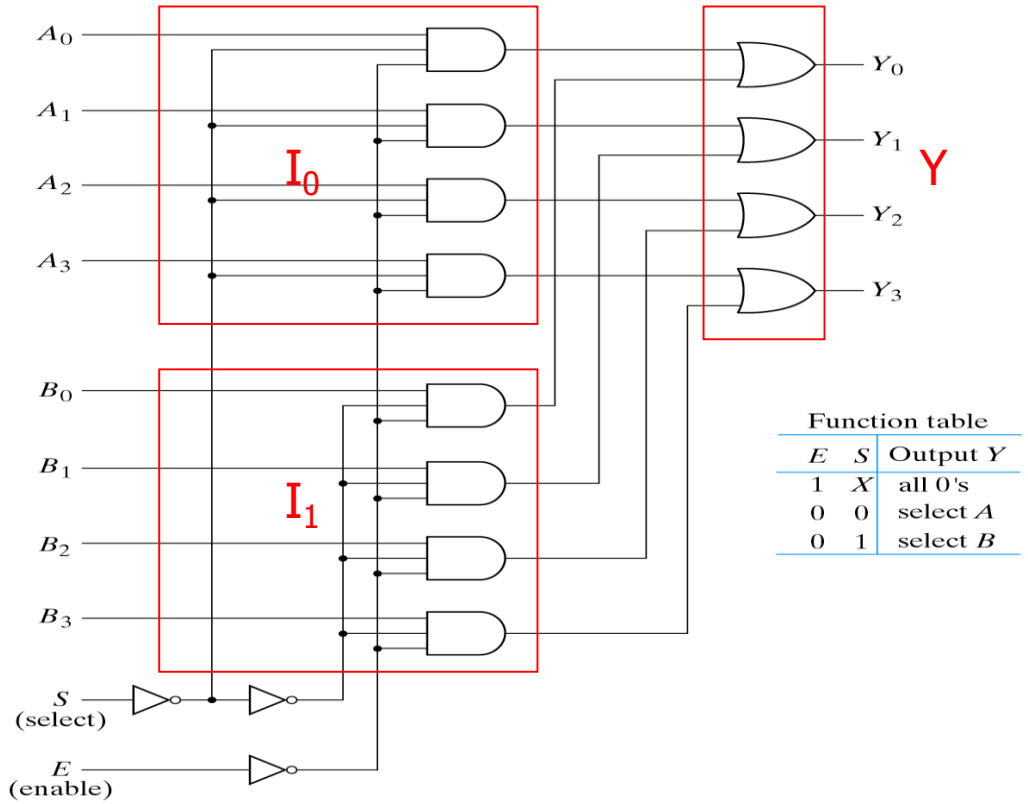

Fig. 4-26 Quadruple 2-to-1-Line Multiplexer

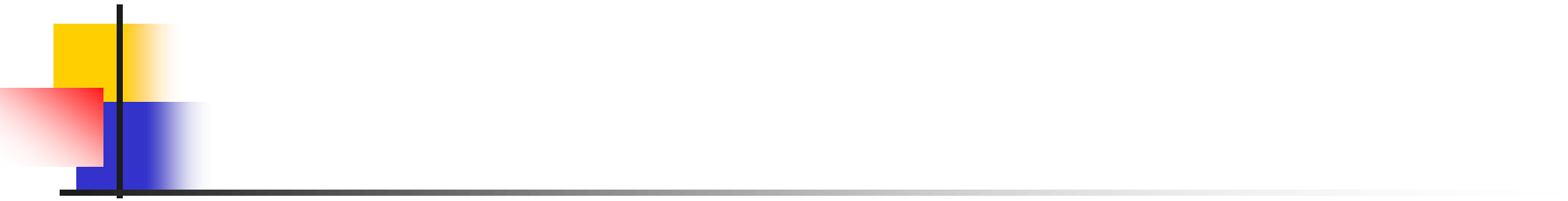

Multiplexer Application

Boolean function implementation

- A more efficient method for implementing a Boolean function of n variables with a multiplexer that has n-1 selection inputs.

$$F(x, y, z) = \Sigma(1,2,6,7)$$

x	y	z	F	
0	0	0	0	$F = z$
0	0	1	1	
0	1	0	1	$F = z'$
0	1	1	0	
1	0	0	0	$F = 0$
1	0	1	0	
1	1	0	1	$F = 1$
1	1	1	1	

(a) Truth table

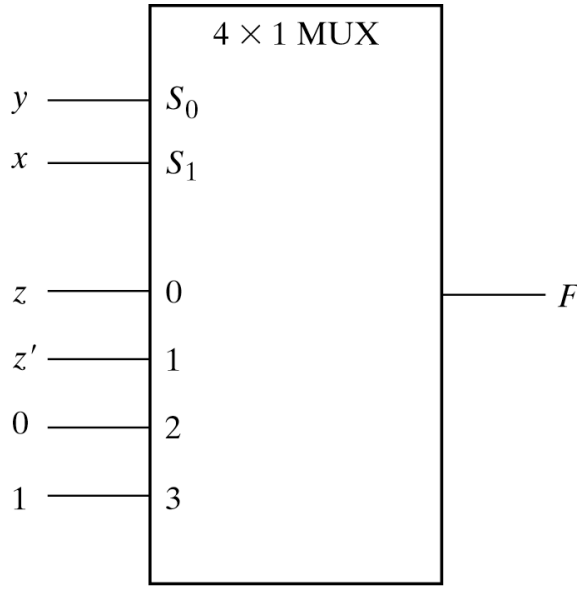

(b) Multiplexer implementation

Fig. 4-27 Implementing a Boolean Function with a Multiplexer

4-input function with a multiplexer

$F(A, B, C, D) = \Sigma(1, 3, 4, 11, 12, 13, 14, 15)$

A	B	C	D	F	
0	0	0	0	0	$F = D$
0	0	0	1	1	
0	0	1	0	0	$F = D$
0	0	1	1	1	
0	1	0	0	1	$F = D'$
0	1	0	1	0	
0	1	1	0	0	$F = 0$
0	1	1	1	0	
1	0	0	0	0	$F = 0$
1	0	0	1	0	
1	0	1	0	0	$F = D$
1	0	1	1	1	
1	1	0	0	1	$F = 1$
1	1	0	1	1	
1	1	1	0	1	$F = 1$
1	1	1	1	1	

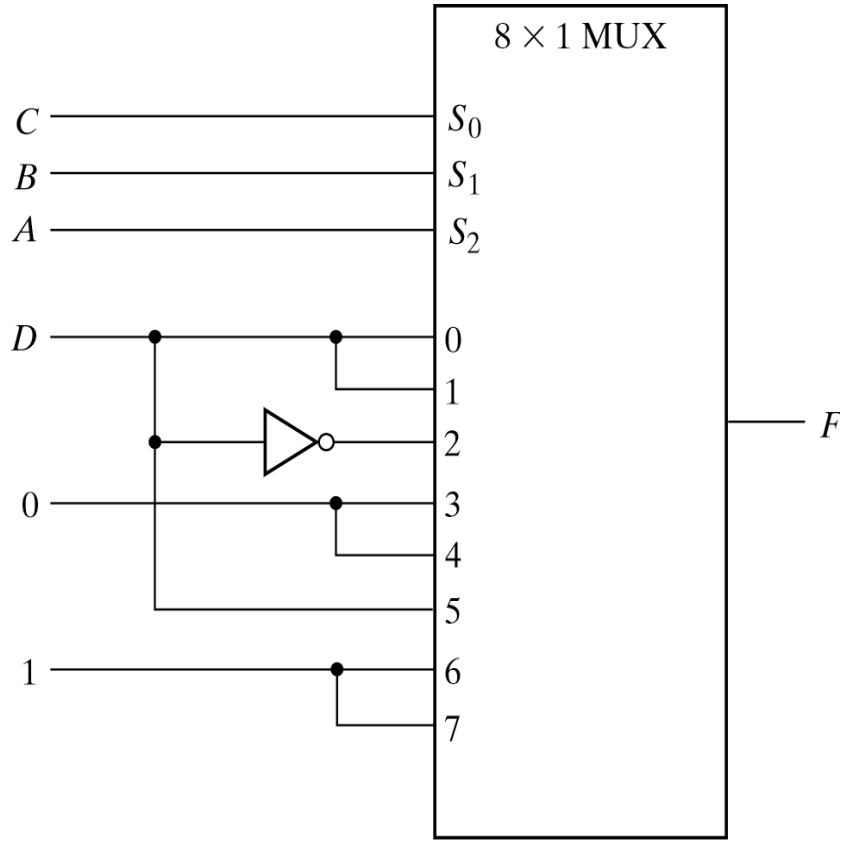

Fig. 4-28 Implementing a 4-Input Function with a Multiplexer

Three-State Gates

- A multiplexer can be constructed with three-state gates.

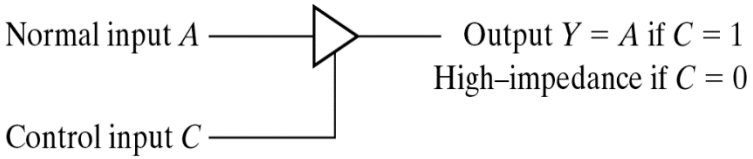

Fig. 4-29 Graphic Symbol for a Three-State Buffer

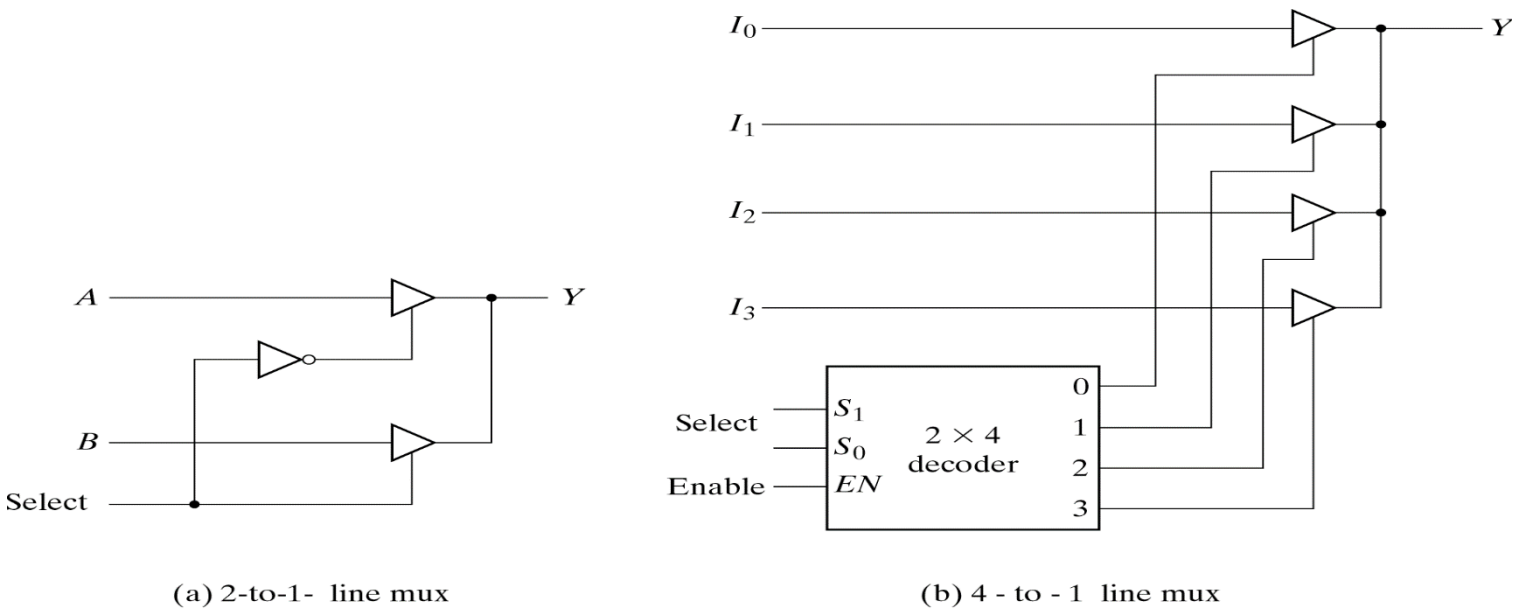

(a) 2-to-1- line mux

(b) 4 - to - 1 line mux

Fig. 4-30 Multiplexers with Three-State Gates

4-11. HDL for combinational circuits

- A module can be described in any one of the following modeling techniques:

1. Gate-level modeling using instantiation of primitive gates and user-defined modules.
2. Dataflow modeling using continuous assignment statements with keyword assign.
3. Behavioral modeling using procedural assignment statements with keyword always.

Gate-level Modeling

- A circuit is specified by its logic gates and their interconnection.
- Verilog recognizes 12 basic gates as predefined primitives.
- The logic values of each gate may be 1, 0, x(unknown), z(high-impedance).

Table 4-9
Truth Table for Predefined Primitive Gates

and	0	1	x	z
0	0	0	0	0
1	0	1	x	x
x	0	x	x	x
z	0	x	x	x

or	0	1	x	z
0	0	1	x	x
1	1	1	1	1
x	x	1	x	x
z	x	1	x	x

xor	0	1	x	z
0	0	1	x	x
1	1	0	x	x
x	x	x	x	x
z	x	x	x	x

not	input	output
	0	1
	1	0
	x	x
	z	x

Gate-level description on Verilog code

The wire declaration is for internal connections.

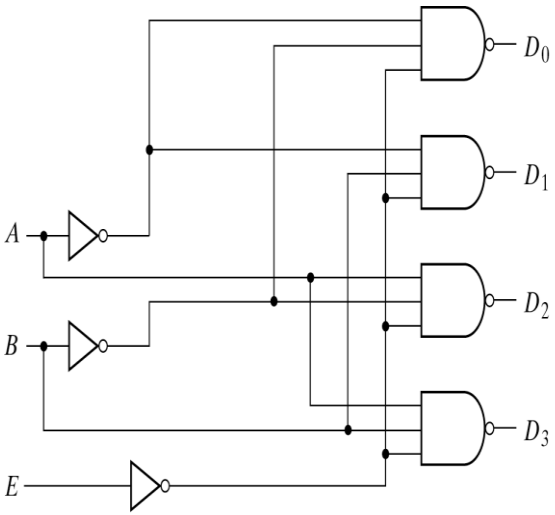

(a) Logic diagram

E	A	B	D_0	D_1	D_2	D_3
1	X	X	1	1	1	1
0	0	0	0	1	1	1
0	0	1	1	0	1	1
0	1	0	1	1	0	1
0	1	1	1	1	1	0

(b) Truth table

Fig. 4-19 2-to-4-Line Decoder with Enable Input

HDL Example 4-1

```
//Gate-level description of a 2-to-4-line decoder
//Figure 4-19
module decoder_gl (A,B,E,D);
   input A,B,E;
   output [0:3]D;
   wire Anot,Bnot,Enot;
   not
      n1 (Anot,A),
      n2 (Bnot,B),
      n3 (Enot,E);
   nand
      n4 (D[0],Anot,Bnot,Enot),
      n5 (D[1],Anot,B,Enot),
      n6 (D[2],A,Bnot,Enot),
      n7 (D[3],A,B,Enot);
endmodule
```

Design methodologies

- There are two basic types of design methodologies: top-down and bottom-up.
- Top-down: the top-level block is defined and then the sub-blocks necessary to build the top-level block are identified.(Fig.4-9 binary adder)
- Bottom-up: the building blocks are first identified and then combined to build the top-level block.(Example 4-2 4-bit adder)

A bottom-up hierarchical description

HDL Example 4-2

```
//Gate-level hierarchical description of 4-bit adder
// Description of half adder (see Fig 4-5b)
module halfadder (S,C,x,y);
    input x,y;
    output S,C;
//Instantiate primitive gates
    xor (S,x,y);
    and (C,x,y);
endmodule
```

Full-adder

```
//Description of full adder (see Fig 4-8)
module fulladder (S,C,x,y,z);
   input x,y,z;
   output S,C;
   wire S1,D1,D2; //Outputs of first XOR and two AND gates
//Instantiate the halfadder
    halfadder HA1 (S1,D1,x,y),
              HA2 (S,D2,S1,z);
    or g1(C,D2,D1);
endmodule
```

4-bit adder

```
//Description of 4-bit adder (see Fig 4-9)
module _4bit_adder (S,C4,A,B,C0);
    input [3:0] A,B;
    input C0;
    output [3:0] S;
    output C4;
    wire C1,C2,C3;  //Intermediate carries
//Instantiate the fulladder
    fulladder  FA0 (S[0],C1,A[0],B[0],C0),
               FA1 (S[1],C2,A[1],B[1],C1),
               FA2 (S[2],C3,A[2],B[2],C2),
               FA3 (S[3],C4,A[3],B[3],C3);
endmodule
```

Three state gates

Gates statement: gate name(output, input, control)

>> bufif1(OUT, A, control);

A = OUT when control = 1, OUT = z when control = 0;

>> notif0(Y, B, enable);

Y = B' when enable = 0, Y = z when enable = 1;

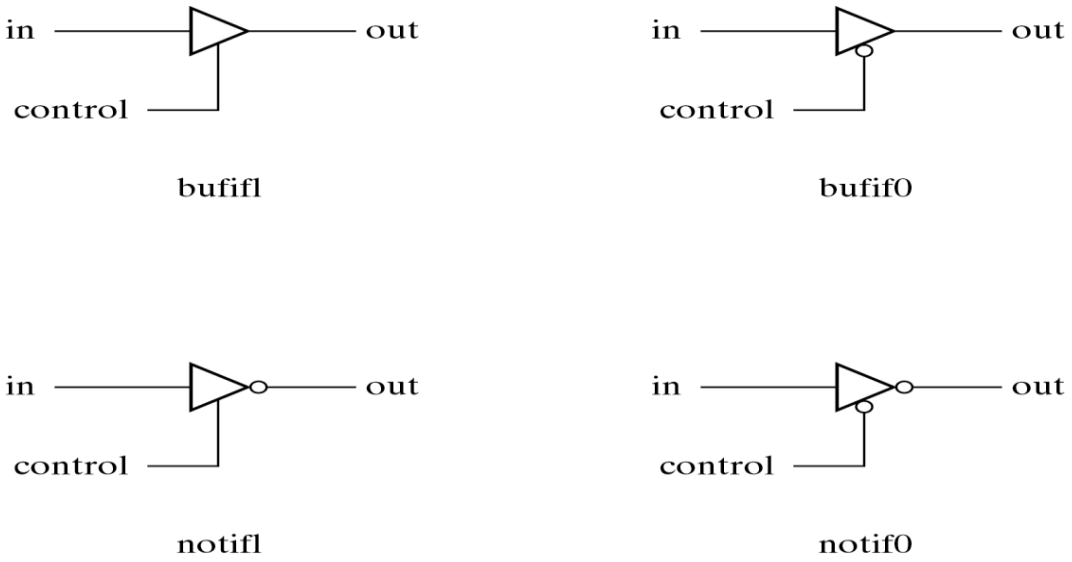

Fig. 4-31 Three-State Gates

2-to-1 multiplexer

- HDL uses the keyword tri to indicate that the output has multiple drivers.

```
module muxtri (A, B, select, OUT);
  input A,B,select;
  output OUT;
  tri OUT;
  bufif1 (OUT,A,select);
  bufif0 (OUT,B,select);
endmodule
```

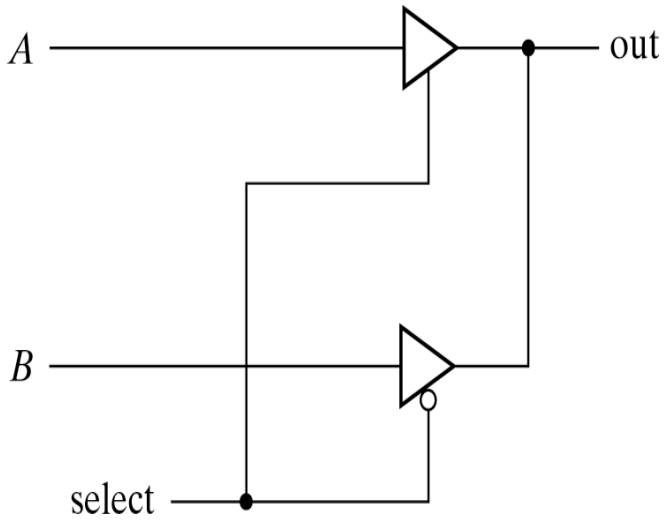

Fig. 4-32 2-to-1-Line Multiplexer with Three-State Buffers

Dataflow modeling

- It uses a number of operators that act on operands to produce desired results. Verilog HDL provides about 30 operator types.

Table 4-10

Symbol	Operation
+	binary addition
–	binary subtraction
&	bit-wise AND
|	bit-wise OR
^	bit-wise XOR
~	bit-wise NOT
==	equality
>	greater than
<	less than
{ }	concatenation
?:	conditional

Dataflow modeling

- A continuous assignment is a statement that assigns a value to a net.
- The data type net is used in Verilog HDL to represent a physical connection between circuit elements.
- A net defines a gate output declared by an output or wire.

HDL Example 4-3

```
//Dataflow description of a 2-to-4-line decoder
//See Fig. 4-19
module decoder_df (A,B,E,D);
   input A,B,E;
   output [0:3] D;
   assign D[0] = ~(~A & ~B & ~E),
          D[1] = ~(~A & B & ~E),
          D[2] = ~(A & ~B & ~E),
          D[3] = ~(A & B & ~E);
endmodule
```

Dataflow description of 4-bit adder

HDL Example 4-4

```
//Dataflow description of 4-bit adder
module binary_adder (A,B,Cin,SUM,Cout);
input   [3:0]   A,B;
input   Cin;
output  [3:0]  SUM;
output  Cout;
assign  {Cout,SUM} = A + B +Cin;
endmodule
```

Data flow description of a 4-bit comparator

HDL Example 4-5

```
//Dataflow description of a 4-bit comparator.
module magcomp (A,B,ALSB,AGTB,AEQB);
    input [3:0] A,B;
    output ALTB,AGTB,AEQB;
    assign ALTB=(A < B),
           AGTB = (A > B),
           AEQB = (A == B);
endmodule
```

Dataflow description of 2-1 multiplexer

- Conditional operator(? :)
- Condition? true-expression : false-expression;

HDL Example 4-6

```
//Dataflow description of 2-to-1-line multiplexer
module mux2x1_df (A,B,select,OUT);
    input A,B,select;
    output OUT;
    assign OUT = select ? A : B;
endmodule
```

Behavioral modeling

- It is used mostly to describe sequential circuits, but can be used also to describe combinational circuits.
- Behavioral descriptions use the keyword always followed by a list of procedural assignment statements.
- The target output of procedural assignment statements must be of the reg data type. Contrary to the wire data type, where the target output of an assignment may be continuously updated, a reg data type retains its value until a new value is assigned.

Behavioral description of 2-1 multiplexer

HDL Example 4-7

```
//Behavioral description of 2-to-1-line multiplexer
module mux2x1_bh(A,B,select,OUT);
    input A,B,select;
    output OUT;
    reg OUT;
    always @ (select or A or B)
          if (select == 1) OUT = A;
          else OUT = B;
endmodule
```

4-to-1-line Multiplexer

HDL Example 4-8

```
//Behavioral description of 4-to-1- line multiplexer
//Describes the function table of  Fig. 4-25(b).
module mux4x1_bh (i0,i1,i2,i3,select,y);
    input i0,i1,i2,i3;
    input [1:0] select;
    output y;
    reg y;
    always @ (i0 or i1 or i2 or i3 or select)
            case (select)
                2'b00: y = i0;
                2'b01: y = i1;
                2'b10: y = i2;
                2'b11: y = i3;
            endcase
endmodule
```

Writing a simple test bench

- In addition to the always statement, test benches use the initial statement to provide stimulus to the circuit under test.
- The always statement executes repeatedly in a loop. The initial statement executes only once starting from simulation time=0 and may continue with any operations that are delayed by a given number of time units as specified by the symbol #.

For example:

```
initial
  begin
        A = 0; B = 0;
 #10 A = 1;
 #20 A = 0; B = 1;
  end
```

Stimulus and design modules interaction

- The signals of test bench as inputs to the design module are reg data type, the outputs of design module to test bench are wire data type.

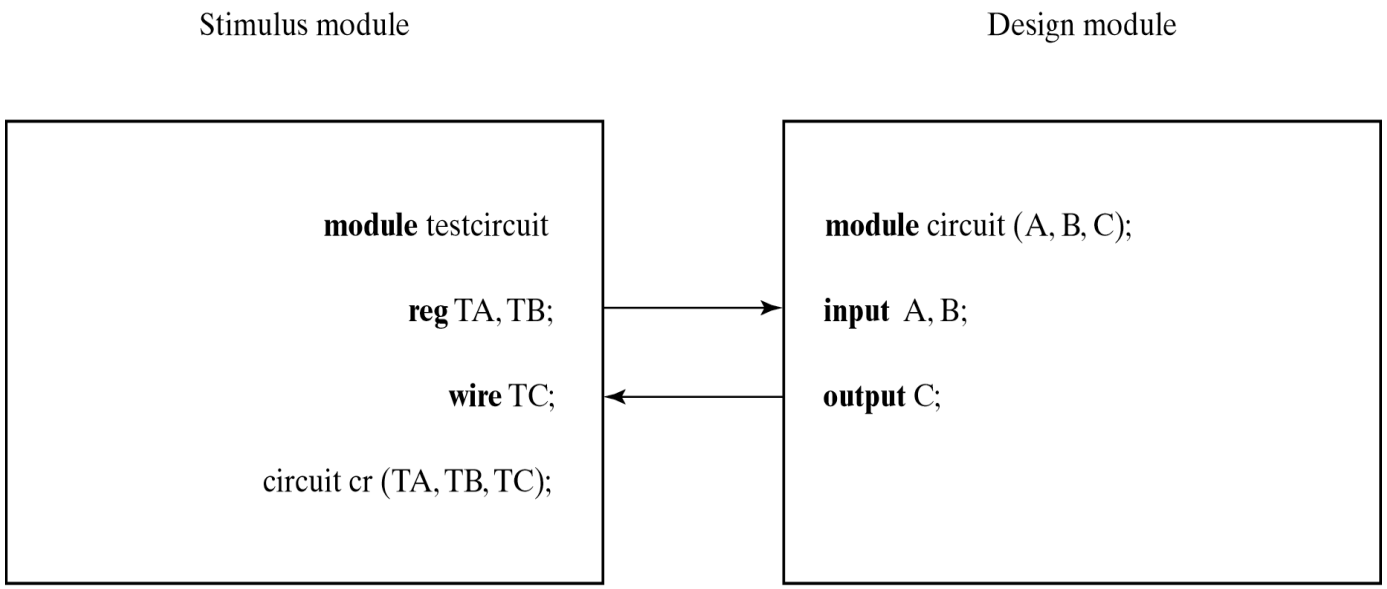

Fig. 4-33 Stimulus and Design Modules Interaction

Example 4-9

HDL Example 4-9

```
//Stimulus for mux2x1_df.
module testmux;
  reg TA,TB,TS;   //inputs for mux
  wire Y;         //output from mux
  mux2x1_df mx (TA,TB,TS,Y);  // instantiate mux
     initial
        begin
              TS = 1; TA = 0; TB = 1;
          #10 TA = 1; TB = 0;
          #10 TS = 0;
          #10 TA = 0; TB = 1;
        end
     initial
      $monitor("select = %b A = %b B = %b OUT = %b time = %0d",
               TS, TA, TB, Y, $time);
endmodule

//Dataflow description of 2-to-1-line multiplexer
//from Example 4-6
module mux2x1_df (A,B,select,OUT);
   input A,B,select;
   output OUT;
   assign OUT = select ? A : B;
endmodule

Simulation log:

select = 1 A = 0 B = 1 OUT = 0 time = 0
select = 1 A = 1 B = 0 OUT = 1 time = 10
select = 0 A = 1 B = 0 OUT = 0 time = 20
select = 0 A = 0 B = 1 OUT = 1 time = 30
```

Gate Level of Verilog Code of Fig.4-2

HDL Example 4-10

```
//Gate-level description of circuit of Fig. 4-2
module analysis (A,B,C,F1,F2);
   input   A,B,C;
   output  F1,F2;
   wire    T1,T2,T3,F2not,E1,E2,E3;
   or  g1 (T1,A,B,C);
   and g2 (T2,A,B,C);
   and g3 (E1,A,B);
   and g4 (E2,A,C);
   and g5 (E3,B,C);
   or  g6 (F2,E1,E2,E3);
   not g7 (F2not,F2);
   and g8 (T3,T1,F2not);
   or  g9 (F1,T2,T3);
endmodule
```

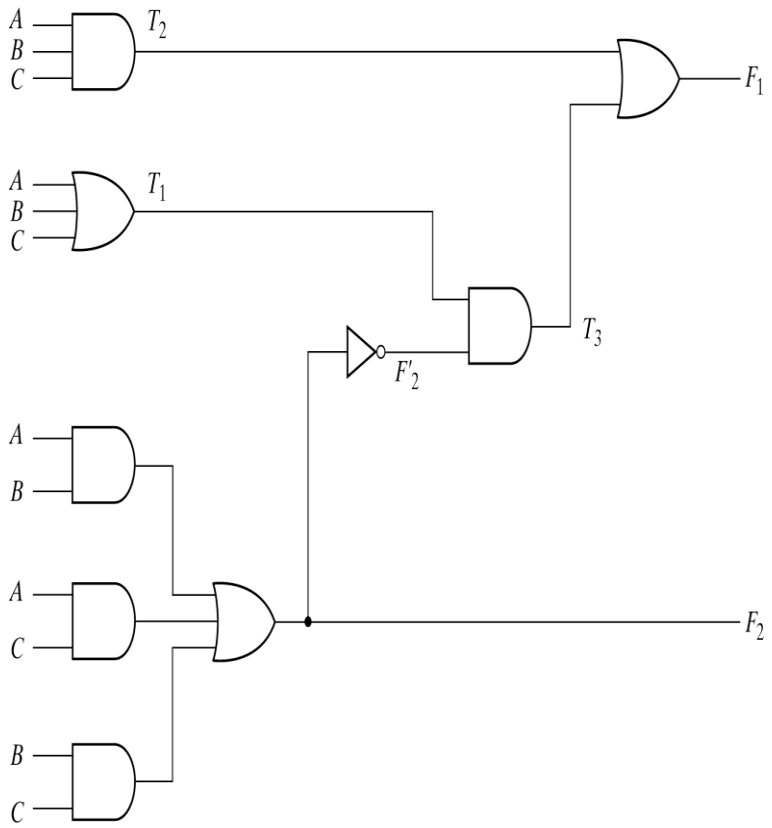

Fig. 4-2 Logic Diagram for Analysis Example

Test Bench of the Figure 4-2

```
//Stimulus to analyze the circuit
module test_circuit;
   reg [2:0]D;
   wire F1,F2;
   analysis fig42(D[2],D[1],D[0],F1,F2);
   initial
     begin
      D = 3'b000;
      repeat(7)
       #10 D = D + 1'b1;
     end
   initial
      $monitor ("ABC = %b F1 = %b F2 =%b ",D, F1, F2);
endmodule
```

```
Simulation log:

ABC = 000 F1 = 0 F2 =0
ABC = 001 F1 = 1 F2 =0
ABC = 010 F1 = 1 F2 =0
ABC = 011 F1 = 0 F2 =1
ABC = 100 F1 = 1 F2 =0
ABC = 101 F1 = 0 F2 =1
ABC = 110 F1 = 0 F2 =1
ABC = 111 F1 = 1 F2 =1
```